ROMAN & BELGIC POTTERY

FROM EXCAVATIONS IN MILTON KEYNES 1972-82

P.T. Marney

BUCKINGHAMSHIRE ARCHAEOLOGICAL SOCIETY
MONOGRAPH SERIES
No.2 1989

ROMAN AND BELGIC POTTERY

FROM EXCAVATIONS IN MILTON KEYNES 1972-1982

by
P.T. MARNEY

With contributions by
K. Hartley, H. Pengelly, R. Rattray,
J.R. Timby and R. Tomber

Editor: Dennis C. Mynard

The Buckinghamshire Archaeological Society,
Monograph Series No 2.
Series Editors: J. Chenevix Trench and M. Farley

Published by Buckinghamshire Archaeological Society
The Museum, Church Street, Aylesbury

ISBN 0 949003 01 9

© Buckinghamshire Archaeological Society 1989. All rights reserved.

ACKNOWLEDGEMENT
The Buckinghamshire Archaeological Society and the Milton Keynes Archaeology Unit gratefully acknowledge the total funding by the Milton Keynes Development Corporation of the preparation and publication of this volume

Typeset in Linotype Times by: Mike Kelly Photosetting
'Avalon', Hartham Lane, Biddestone, Chippenham, Wiltshire.
from Author's Discs
Printed by Antony Rowe Ltd, Chippenham, Wiltshire

CONTENTS

E: Lead Glazed Wares

F: Mica Dusted Wares

G: Unusual Black Colour-Coated Fine Wares

H: Wares of Unknown Origin

J: Imported Wares

APPENDICES

1. Detailed Fabric Descriptions

LIST OF FIGURES

LIST OF TABLES

LIST OF PIE CHARTS

FOREWORD AND ACKNOWLEDGEMENTS

During the construction of the new city of Milton Keynes many archaeological sites have been destroyed. However, due initially to the enthusiastic hard work of local amateur archaeologists and later to the establishment of the Archaeology Unit by the Milton Keynes Development Corporation many such sites were excavated, frequently under difficult rescue conditions, and much information gleaned. These excavations (RMK 1987) produced a not inconsiderable quantity of pottery and finds; the pottery in particular provided a useful opportunity to examine and compare different assemblages of the same or similar date from many varied sites. As these groups were sorted, catalogued and compared it was found that many wares had fairly consistent percentage levels within assemblages of the same period no matter what the standing of the site; this was especially true of the coarse wares. Seventeen of these groups form the basis of this report; it is hoped that together these groups and their percentages provide a picture of the changing aspects of Roman and Belgic pottery in this area from the early to mid first century to the rather uncertain years of the late fourth and early fifth centuries AD.

Many readers may be looking in this volume for the dating evidence for those sites published in *Roman Milton Keynes* (RMK 1987). It was found however that owing to the large number of sites and individual features involved it was impossible to produce a traditional pottery report which both discusses the ceramic history of the area and presents the detailed evidence on which the dating of phases and individual features is based. Thus this report is based primarily on the study of pottery from all the sites in that volume (and others still to be published) and secondly on conclusions reached after discussion with colleagues both locally and nationally. The resulting model is based on fabric and form *combined with fabric percentages*; the latter, it is hoped, offers a method for closer dating. Such a model is useful in that where both form and fabric remain fairly constant over a long period (late third to fourth centuries for example) a blanket date is often given; the use of percentages is an attempt to avoid such dating. For this reason one or two of the dates thus suggested are unconventional (ie. Group 11) but the arguments for such dating are fully explained in the discussion for each group.

Those features and phases referred to for sites published in RMK were dated by form and fabric and then tested against this model, producing the dates suggested in that volume.
The scientific duty to make the evidence available both for contemporaries and for possible later re-evaluation is met by detailed notes on the pottery from these sites being lodged in the archive.

The writer would like to acknowledge assistance from the following; Anne Anderson (Lower Rhineland I), Paul Arthur (glazed ware), Bernard Barr (Hadham), Maggi Darling (Swanpool), Sheila Elsdon (stamped ware), Ray Farrar (BBI), Chris Going (Hadham), Dr. Kevin Greene (early fine wares), Malcolm Lyne (Alice Holt/Farnham), Terry Pearson (Saxon), Rob Perrin (Lower Nene Valley), Val Rigby (Gallo-Belgic), Dr. Robin Symonds (Rhenish), Hugh Toller (Colchester), Dr. Paul Tyers (poppy-headed beakers), Dr. David Williams (amphorae) and Dr. Christopher Young (Oxford).

Thanks are also extended to Rita Rattray, Roberta Tomber and Dr. Isobel Thompson for their invaluable thin-section reports.

Special thanks are due to Kay Hartley for her mortaria reports and much appreciated help with the whitewares, and to Hedley Pengelly for his work on the Samian (including solving many difficulties, and lengthy correspondence over the ?'Spanish samian').

I am also much indebted to Charmian Woodfield for reading and correcting the manuscript, her detailed work on the Wood Corner pottery and for all her help and encouragement during the writing of this report.

I would also like to acknowledge and thank Ros Tyrrell, Susan Marshall, June Burbidge the illustrator, Bob Zeepvat for the plans and finally Anne Mynard and Leena Lindholm-White for their patience with the seemingly never ending typing.

Finally I am indebted to Milton Keynes Development Corporation for financially supporting the research which has resulted in the production of this volume and for financing its publication.

INTRODUCTION

In the Belgic and Roman period the area now designated as Milton Keynes was agricultural land populated by isolated farmsteads. To the north lay the town of Lactodorum (Towcester) and to the south Magiovinium. The Watling Street, running south-east to north-west through the area, connected these two towns (Fig. 1), the land between them being extremely rural. This fact is reflected in the pottery, for early imports of Flavian and Trajanic date are rare within Milton Keynes whilst, in comparison, at Allen's Yard in Towcester huge quantities of Flavian imports were found (C. Woodfield pers. comm.). Amphorae, a typical sign of romanization were also scarce within the more rural locations and in far greater evidence within and nearer the towns; Caldecotte MK44 near Magiovinium is a case in point (see Table 20).

Sites of affluent appearance were not necessarily those with the richest pottery assemblages and thus the status of a site cannot be determined by its pottery. For example Woughton, MK297 (RMK 1987, 90), an unprepossessing mix of ditches, gullies and timber built structures, contained a wealth of imports and good quality British material.

This report deals with seventeen groups of dated pottery from sites of various status, each covering a period between the early to mid first century AD to the late fourth to early fifth century. Where possible these are securely stratified assemblages but, because for some periods these were not available, those with evidence of least contamination have been used. This has meant that a number of groups containing only a small quantity of pottery have had to be used; these may be considered statistically unsound but nevertheless they still echo the percentage patterns found in larger more heavily contaminated assemblages. The least contaminated mid to late fourth century groups available (Groups 15 and 16) did not produce a great deal of pottery; for this reason both groups are detailed. Contaminated groups are clearly marked and wherever possible the intrusive or residual elements are indicated. Obviously body sherds of this nature are not as readily discernible, therefore it is hoped that the degree of contamination of the group (indicated by the number of intrusive or residual rims) will be a guideline to the accuracy of the percentages. It must be stressed that the dating of all the groups is based on experience gained working through many thousands of sherds from all the sites discussed in RMK, with the exception of Wood Corner MK64.

The groups contain many of the pottery types to be found in this area but obviously they cannot include all the occurring forms. The additional forms are published here in order to present a full range of the vessel types we have found in each fabric. The illustrations for the groups are listed after the discussion of each group and similarly the illustrations of the additional forms are given at the end of each fabric discussion. The dates given refer to the contexts within which the pottery was found.

All the Roman pottery fabric types found within the city up to 1982 are described and discussed. Each is a part of a working type series which evolved during the sorting and cataloguing of the pottery from many sites; such haphazard growth did not allow for a defined order to be followed. Gaps in the numbering or lettering are the result of combining fabrics or subgroups.

Saxon pottery was occasionally found and to facilitate identification was called Fabric 10. This will be seen on two of the Pie Charts.

Because the type series is purely numerical and alphabetical it was thought best for the layout of the report that the various fabrics be divided according to their place of origin, where known. There are a small number of exceptions; the mortaria and lead glazed wares for example.

It is hoped that eventually further work within the area will enlarge upon the current findings and verify (or of course, possibly negate) the pattern of percentages set out in this report. It would be an interesting exercise if the fates of the pottery industries could be closely linked with the events of the time but all too often the dates of the pottery are too wide for such detail. However, even the briefest of glances will note the gradual romanization of the pottery, the flourishing second century trade, and possible trauma that took place during the later second century, the third century recession and thriving self-sufficient fourth. This is a pattern seen over the country as a whole and it is good to find it so plainly reflected in this collection of un-impressive pottery assemblages.

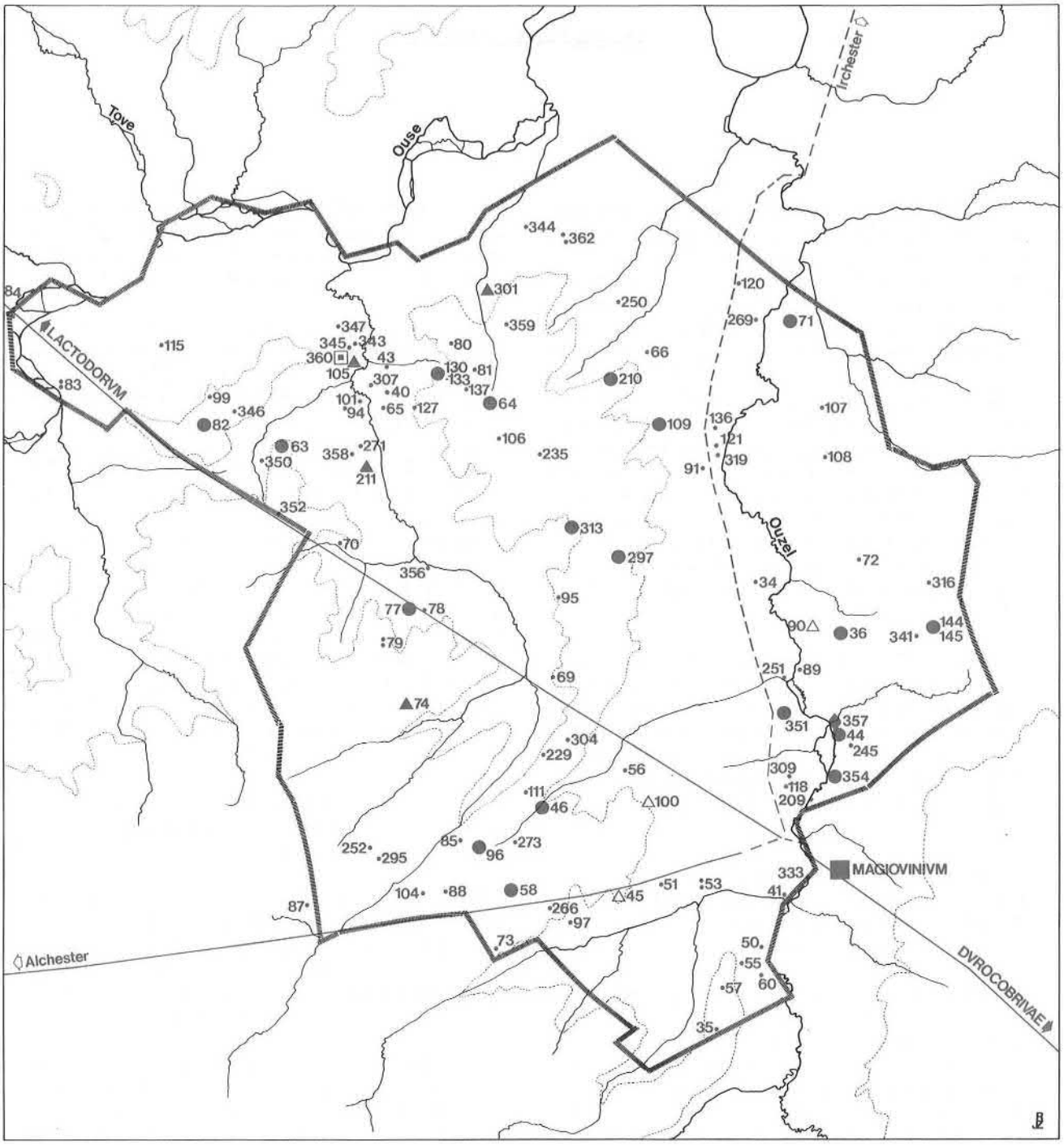

ROMAN MILTON KEYNES

Contours at 92m. OD.

0 1 2 Roman miles 4

0 1 2 3 4 kilometres 6

Figure 1: Roman sites in Milton Keynes. (Site Numbers are those given in text).

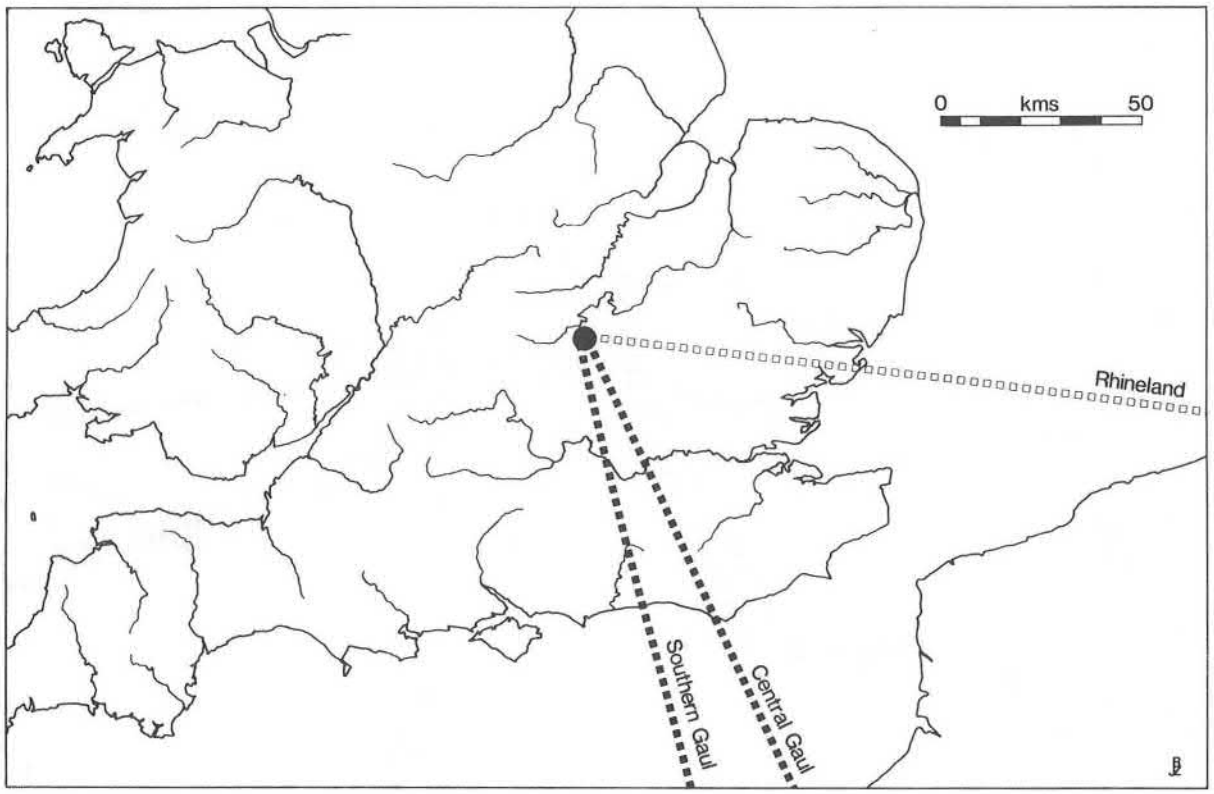

Figure 2a: AD. c. 40–70/80.

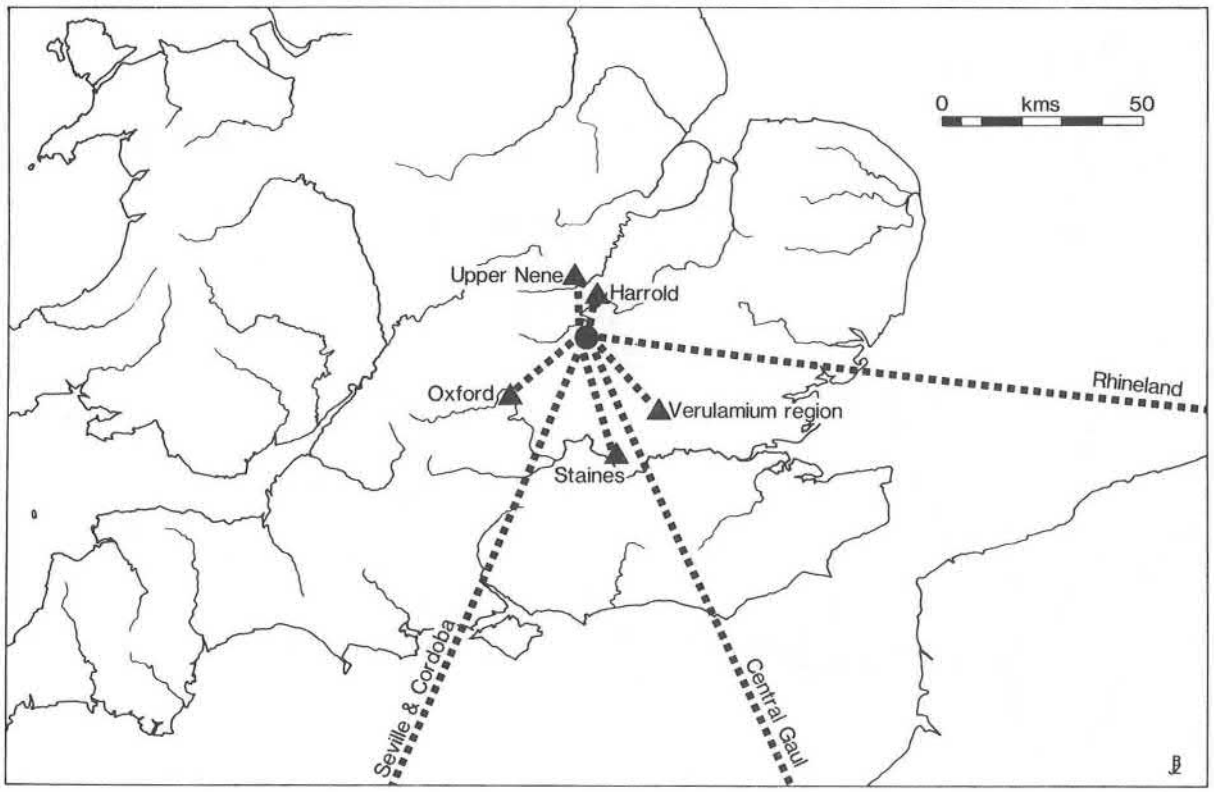

Figure 2b: AD. c. 70/80–155.

Pottery sources for Milton Keynes
throughout the Roman period

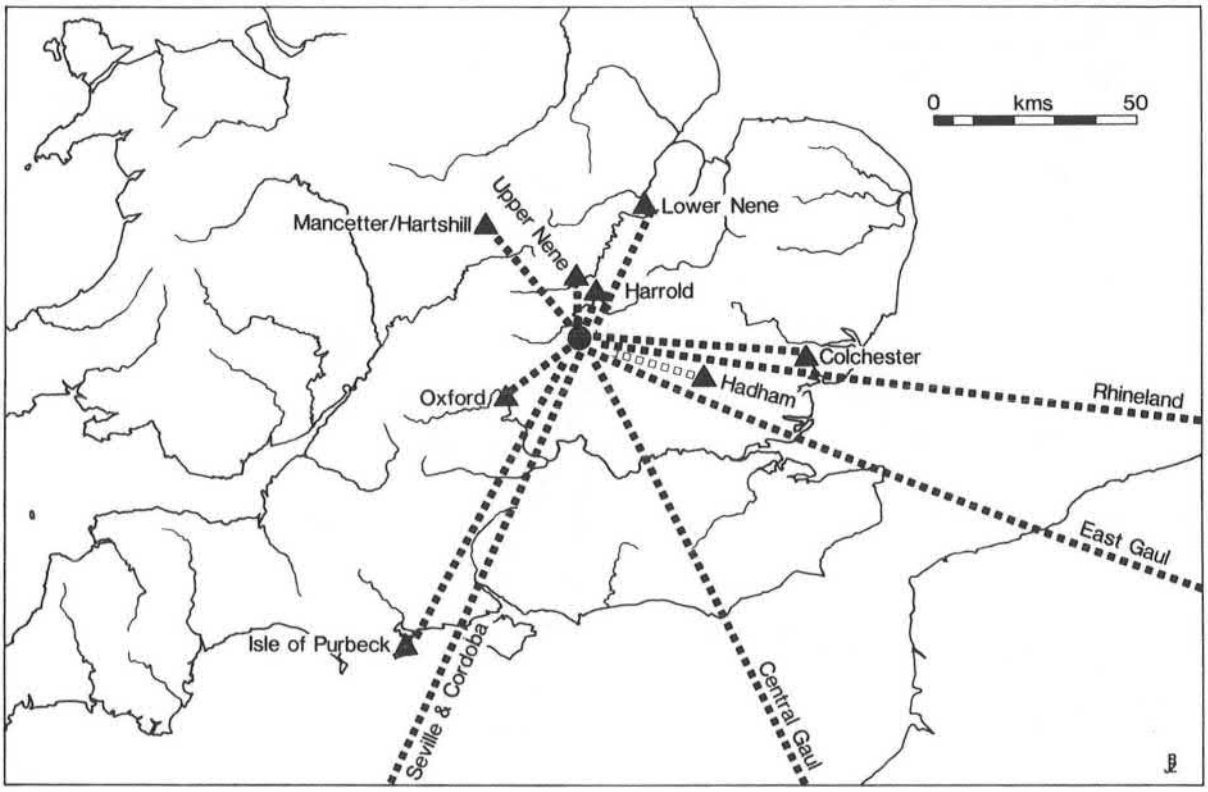

Figure 3a: AD c. 155–220.

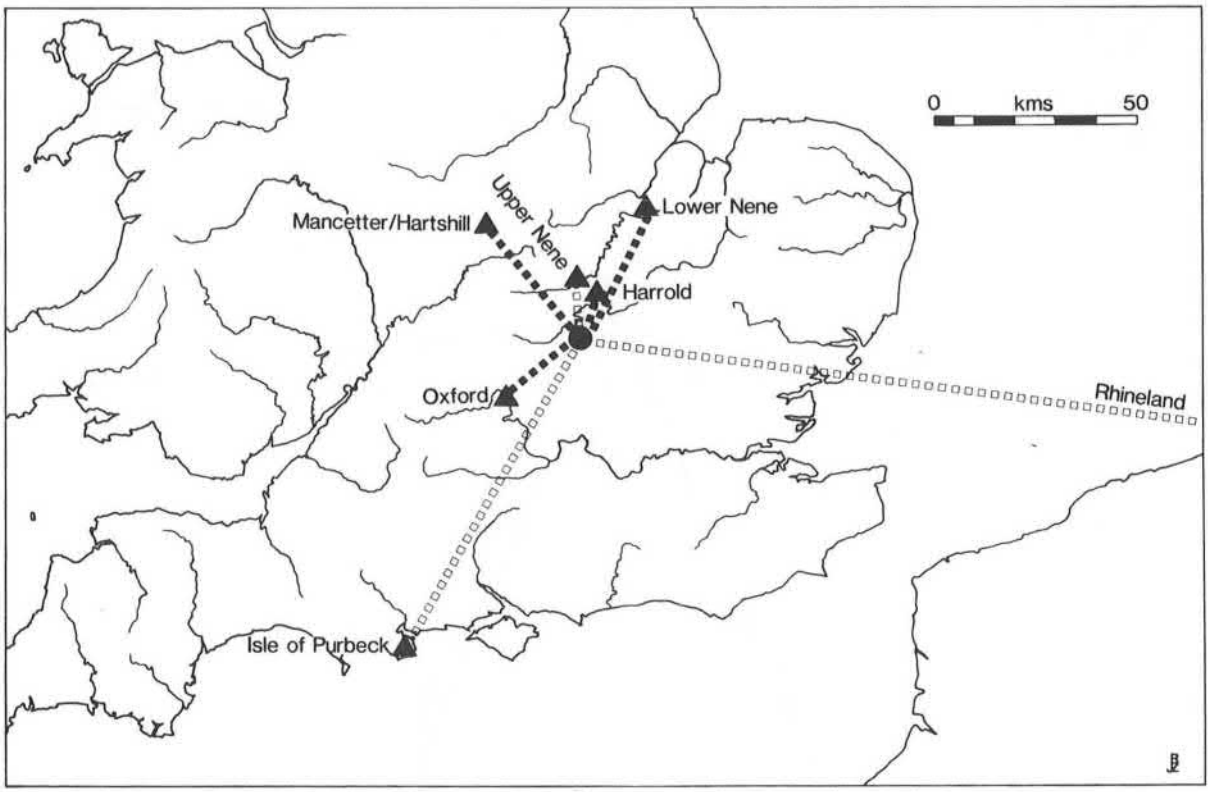

Figure 3b: AD c 220–270/300.

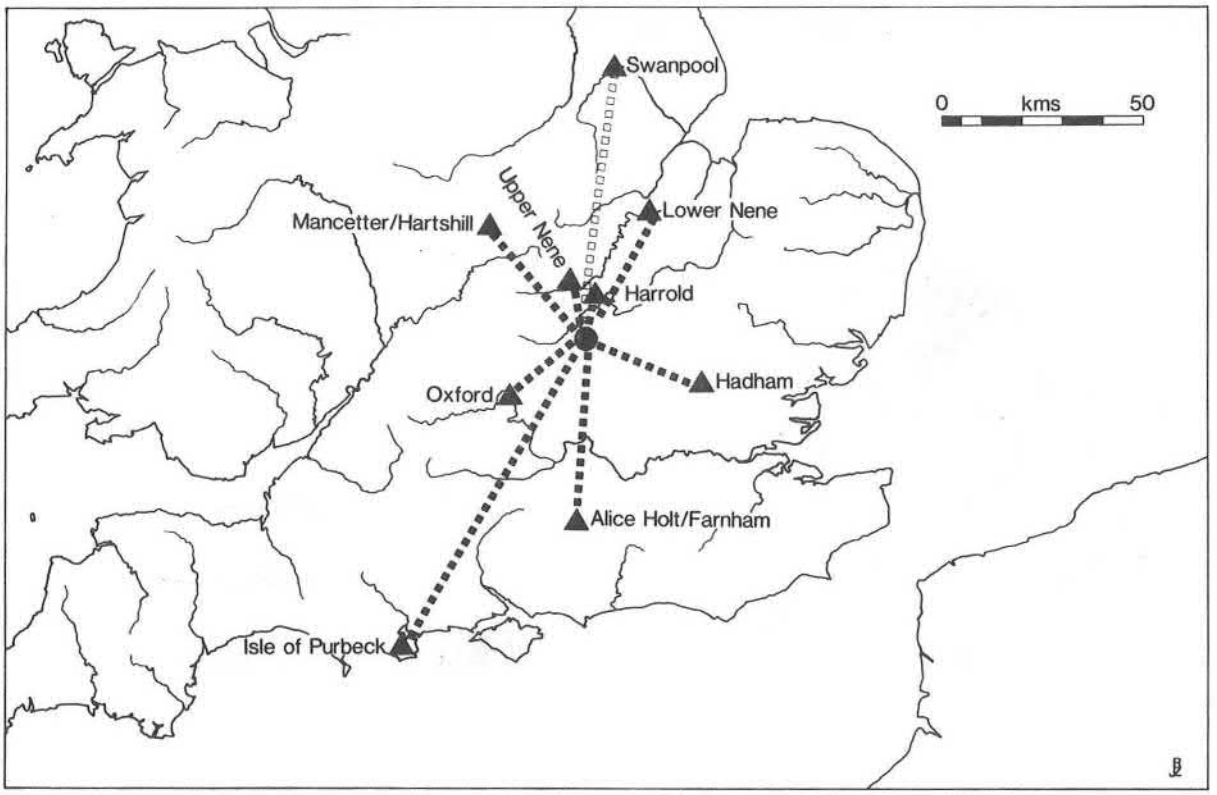

Figure 4: AD c. 270/300–400+.

Key to Pie Charts

Note: The inner circle shows proportions of wares defined by key below whilst the outer circle shows fabric types.

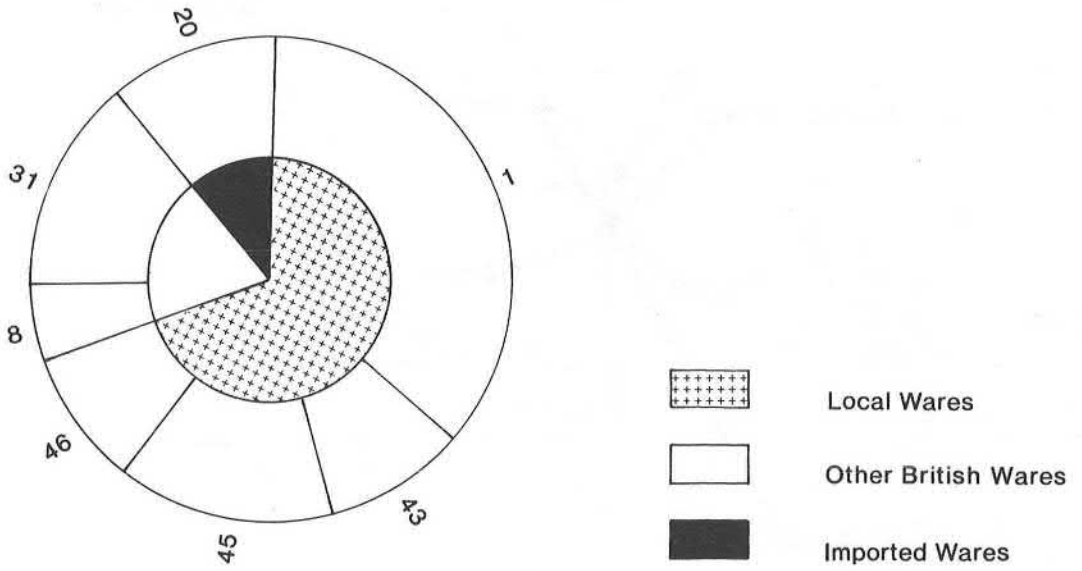

GROUP NO	DATE (approx.)	NON-LOCAL WARES INC CONTINENTAL	NON-LOCAL WARES EXC CONTINENTAL	CONTINENTAL
1	Early to mid first	0	0	0
2	Mid to late first	5.9	5.27	0.63*
3	Late first to early second	12.27	11.57	0.72
4	Late first to early second	9.2	8.41	0.79
5	Early to third quarter second	22.65	19.26	3.39
6	Mid to late second	33.3	10.0	23.00
7	Late second	13.83	11.27	2.56
8	?Very late second	44.07	38.69	5.38
9	Late second to early third	32.53	26.98	5.55
10	Late second to mid third	32.46	27.47	4.99
11	?Mid to late third	7.21*	7.21*	0
12	Late third	5.71	5.71	0
13	Early to mid fourth	29.31	28.56	?0.75 (Possibly residual)
14	Mid fourth	28.96	28.96	0
15	Mid to late fourth	39.1	39.1	0
16	Mid to late fourth	34.75	34.75	0
17	?Late fourth – early fifth	27.88	27.88	0

TABLE 1. Percentages for non-local and continental fabrics (excluding residual and intrusive material). *Where the recovery of an almost complete fragmentary pot has drastically changed the percentages to produce an artificially high reading the percentage figure for three sherds has been used to represent that pot.

THE POTTERY GROUPS

GROUP 1 MK36 WALTON Fig. 5

This is a small group of pottery consisting of 226 sherds, retrieved from the enclosure ditch and a pit of the same date (RMK, 30, Fig. 2). The date indicated by the pottery is early to mid first century AD, based on fabric and form, although the presence of much oxidized orange 'Belgic' ware, the colour of which is essentially a late phenomenon, suggests that some of the material may date to the conquest period. It is, however, very much a 'Belgic' assemblage rather than Roman, as stated in RMK.

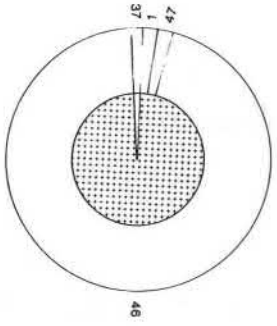

Fabric	%
1.	1.77
47.	1.77
46.	95.13
37.	1.32

PIE CHART 1: Percentages of Fabrics in Group 1.

An exceptional feature of this site is its high percentage – 95.13% – of 'Belgic' grogged ware. This is largely composed of Fabrics 46a and 46m, with one grey jar in 46n. Those pieces in Fabric 46m are in a similar fine brown-orange/pale orange ware to that produced at the Caldecotte Kiln I (page 95). The proximity of this kiln may explain the high percentage of Fabric 46, although there is some variation in the forms found on the two sites. It may be that another kiln lay close to the area of excavation but was not discovered. Fragments of baked clay were recovered, although it is of course possible that these were remnants of a domestic oven or burnt wattle and daub structure rather than evidence for a kiln.

Other subgroups of Fabric 46 were also found, these being the sandier 46k and 46g. There is difficulty over the earliest date for these sub-groups; it is possible that their presence lengthens the suggested date range into the second half of the first century AD. This is also suggested by the presence of four sherds of Fabric 47.

However, it was noted by Isobel Thompson (1982, 245) that lid-seated jars, like No 3 in Fabric 47j were sometimes made with sand rather than grog, but were still essentially native. The majority of the pottery was wheelmade; only two rims (Nos 1 and 15) bear the type of irregularities that may be evidence of their being handmade.

In all, the group contains approximately sixteen vessels, excluding the vessel represented by the intrusive Much Hadham material. The dominant vessel form is the necked wide-mouthed jar or bowl and there are no continental imports apart from a scrap of Samian from the topsoil.

CATALOGUE: Fig 5, 1–15

All rims from the site are illustrated. Type numbers refer to Thompson 1982.

1. Fabric 46a. An Iron-Age derived form, possibly handmade. Type C3 or C1–2, a plain rounded jar; there is a faint bead rim and some thickening internally. Both types began in the first century BC but continued to be made even after the conquest. Pit 1.

2. Fabric 46a. Small plain lid-seated jar. Type C5–1. Essentially a native form although frequently found in contexts that include Roman material. Pit 1.

3. Fabric 47j. Plain lid-seated jar. Type C5–1. This orange sand-tempered fabric is normally later in date than Fabric 46, although Thompson (1982, 245) notes that this form was sometimes made in sand rather than grog but was still essentially native. Ditch section 1.

4 and 5. Fabric 46m. Butt-beakers. Type G5–6. The rims are more rounded in profile than those from Kiln I (cf. Fig. 38, 12– 18). The type occurs up to c 50 AD. Ditch sections 1 and 2 respectively.

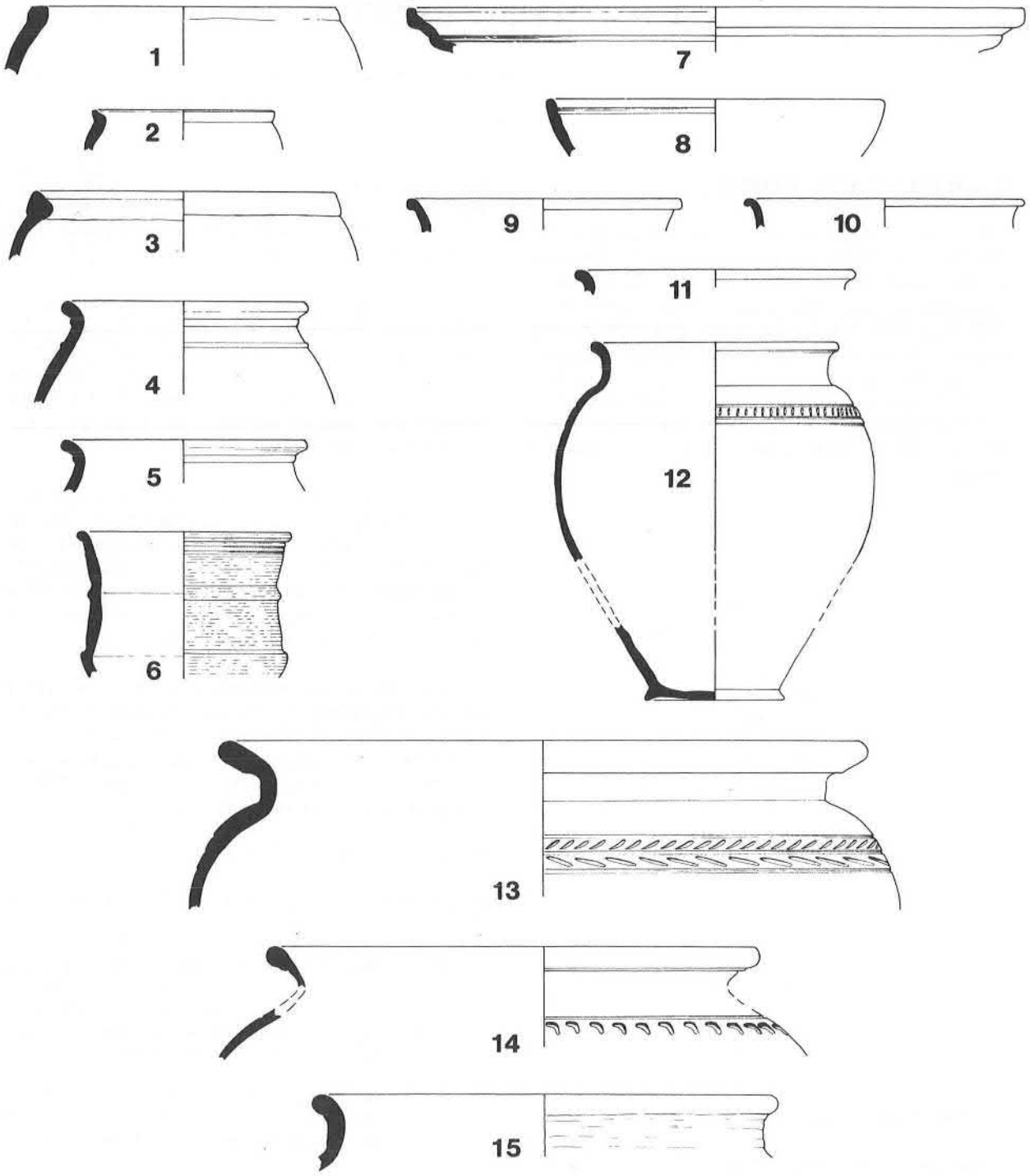

Figure 5: Pottery Group 1: early to mid first century, (Scale 1:4).

6. Fabric 46a. Cordoned carinated cup, unconstricted wall above carination. Type E1–3. Dateable contexts so far are first century AD, occasionally overlapping the conquest. This vessel is black with a burnished outer surface. Pit 1.

7. Fabric 46m. Copy of the Gallo-Belgic form Cam. 5; a platter with splayed wall, overhanging rim and two internal mouldings. Type G1–5. Such copies are rarer than those with one moulding (Thompson 1982, 457). This is a fine orange-surfaced vessel, beautifully made. At Prae Wood, Herts the type dates to 30–50 AD, at Sheepen, Colchester to 49-65 AD. Ditch section 2.

8. Fabric 46m. Copy of Gallo-Belgic form Cam. 12; a platter with a convex outsplayed wall and one internal offset. Type G1–7. The type began before the conquest; Romanised versions appeared by the third quarter of the first century AD. Pit 1.

9/10/11. Fabric 46m. Wide mouthed jars or bowls, types B1–1 or D1–1, a basic form in 'Belgic' pottery with a long life. Pit 1. Ditch sections 1 and 2 respectively.

12. Fabric 46n. Large portion of a soft grogged grey jar; the colour may have been accidental or perhaps was an attempt to copy Roman greywares. Possibly a type B1–2, a tall plain everted-rim jar with an offset or cordoned neck, or a romanised version of a B3–6, a tall jar with shoulder cordons, not narrow necked (see Thompson 1982, 164, 19-72). Both types appeared at the end of the first century BC and continued to the post-conquest period. This vessel has a lightly raised cordon decorated with a row of vertical stab-marks bordered by a double and a single groove. Ditch section 1.

13. Fabric 46a. Storage jar with incised shoulder decoration. Type C6. The type emerged with the earlier appearance of grog-tempering and continued unchanged to the end of the first century AD (Thompson 1982, 259). Ditch section 1.

14. Fabric 46k. As 13. The decoration appears to have been made with a finger or thumb nail. Pieces from the same vessel were recovered from Pit 1 and Ditch section 1.

15. Fabric 46a. Jar with a slightly rippled or corrugated neck. Possibly a type B2–4. The underside of the rim and the ripples are irregular; these may be indications that the vessel was handmade. The type B2–4 first occurred in the first century BC, but the form recurs in later contexts and may even be post-conquest (Thompson 1982, 133). Pit 1.

GROUP 2 MK 71 COTTON VALLEY Fig. 6 and Fig. 7

This group came from Pit 1 and consists of approximately 475 sherds; the figure cannot be absolute owing to the presence of a highly fragmented fineware (Fabric 34a) of which only the largest sherds were counted. The pit had been cut into a ditch containing pottery of the same date (RMK, Fig. 8) and page 36.

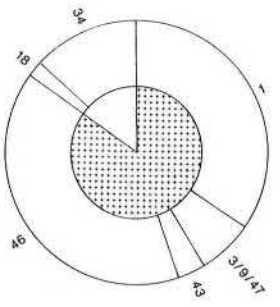

Fabric	%
1.	34.73
3/9/47.	7.16
43.	3.37
46.	40.21
18.	1.19
34.	12.63

PIE CHART 2: Percentages of Fabrics in Group 2.

The group has been dated to the mid to late first century AD. One of the group, the mica-dusted vessel, 42, is of a type most common in the Flavian-Trajanic period c. 69-117 AD (Greene 1979b, 91); at Verulamium eleven similar vessels were given the date range 60–110 AD (Frere 1984, 268 no 128).

Fifty-six vessels and three lids in eight fabrics were represented. The eighteen jars in shell-gritted ware were all of the lid-seated type, contrasting greatly with the twenty-four 'Belgic' grogged vessels which varied from cups and platters to storage jars. This suggests the existence of a division based on function, with the shell-gritted wares being exclusively used for cooking-pots and those in 'Belgic' grogged ware being used for the table and for storage.

The effect of the Roman conquest may be seen in the greater availability of different pottery types on this site as compared to the earlier Group I from Walton (page 7). Despite this, Roman influence was not strong, for the majority of the pottery was native; even those vessels in romanised fabrics were still native in form eg. the lid No 39 and lid-seated jars Nos 13–15. The mica-dusted jar, No 42, however may be a continental import, either from Gaul or the Rineland. There was no samian.

CATALOGUE: Fig 6, 1–34 and Fig 7, 35–42

Owing to the similarity of many of the vessels not all are illustrated; instead examples of each form type are shown.

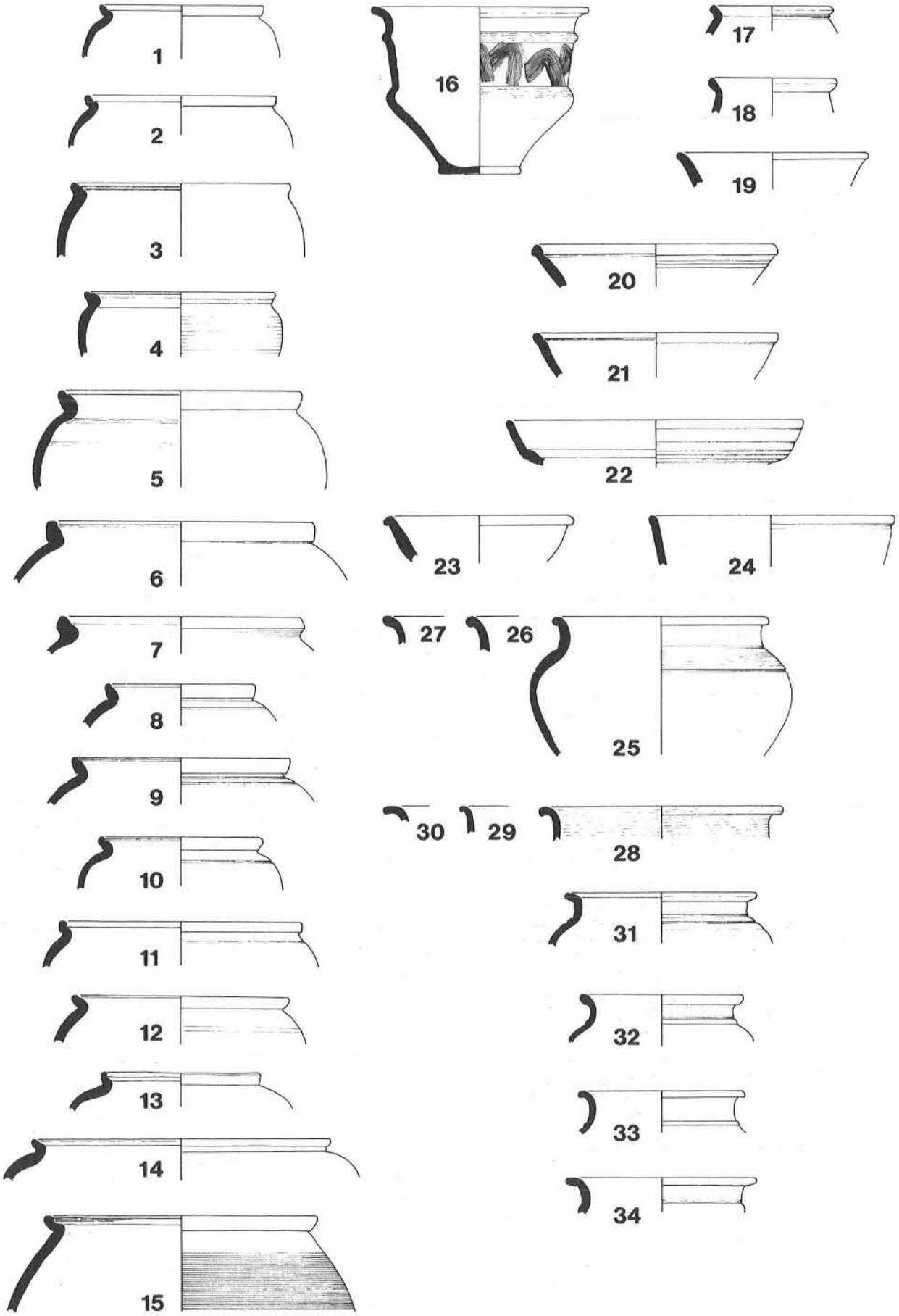

Figure 6: Pottery Group 2: early to mid to late first century, (Scale 1:4).

Type numbers refer to Thompson 1982.

Plain Lid-seated Jars

Type C5–1. Essentially a native form although frequently found in contexts that include Roman material. It was made with grog, sand or shell-temper; in this area the latter fabric dominates. These vessels were probably used as cooking pots as is suggested by the blackening on their outer faces, though none actually bear traces of soot.

1. Fabric 46a. Small jar, grey-cored with smooth orange-brown surfaces. Faint, fine throwing lines are visible upon the blackened outer face.

2. Fabric 1a. Blackened outer face, orange-brown inner.
   Not illustrated – two other vessels of similar form, fabric and colouring.

3. Fabric 1a. Jar with two lid-seated grooves; this type of rim is not common. The vessel is coarse and heavily blackened.

4. Fabric 1a. Coarse, vesicular buff-surfaced vessel, very lightly rilled.
   Not illustrated – a vessel of similar form in Fabric 9xy, a fairly hard black-surfaced sand tempered jar.

5. Fabric 1a. Slightly sandy. Orange-brown surface lightly blackened on the outer face.
   Not illustrated – vessel of similar form, colouring and fabric, although less sandy.

6. Fabric 1a. Pinkish-buff surfaces, lightly blackened on the inner face and over the top of the rim.

7. Fabric 1a. Orange-brown ware, blackened on the upper outer surface only.
   Not illustrated – two other vessels of similar form, fabric and colouring.

8. Fabric 1a. Blackened outer face, orange-brown inner. Faint shoulder groove.

9. Fabric 1a. Vesicular orange ware with patchy blackening. Decorated on the upper shoulder with two horizontal grooves.

10. Fabric 1a. Orange-brown surfaces, lightly and patchily blackened on the outer face. Faint shoulder groove.
    Not illustrated – one vesssel of very similar form in Fabric 1 vesicular black ware.

11. Fabric 1a. As No 10 above.
    Not illustrated – a vessel of very similar form in a fairly vesicular coarse Fabric 1, brownish on the inner face with a blackened exterior.

12. Fabric 1a. Buff-surfaced vessel with a shoulder groove.

13. Fabric 47ab. Sand-tempered vessel, blue-grey core with brownish surfaces blackened on the outer face. Although apparently wheel-thrown the rim of this sherd is markedly irregular.

14. Fabric 9xy. Black surfaced sand-tempered vessel, fairly hard. Linear marks on the shoulder may be the remanants of a burnish.

15. Fabric 43f. Vessel with a blackened brownish-buff rilled exterior and dark pinkish-buff interior. The sherd is large and was perhaps one of the latest depositions.

Cups/Beakers

16. Fabric 46a. Possibly a large version of a Type E1–3, a cordoned carinated cup with an unconstricted wall above the carination. Dateable contexts so far are first century AD, occasionally overlapping the conquest. Its large size may indicate a late date. This vessel is black and burnished upon the cordon and carination. Dateable contexts so far are first century AD, occasionally overlapping the conquest. Its large size may indicate a late date. This vessel is black and burnished upon the cordon and carination.
    Not illustrated – a similar version of the above, in an oxidized ware.

17 and 18. Fabric 46p. Miniature butt-beakers type G5-3. Although essentially a form of the first half of the first century AD, Roman examples have been found (Thompson 1982, 515).

19. Fabric 46m. Flared rim of a small vessel, perhaps a simple carinated cup Type E1–1 or E1–4.

Platters

20. Fabric 46p. Copy of a Gallo-Belgic form Cam. 4 or 5; Types G1–4 or G1–5, a platter with a splayed wall, overhanging rim and one or two internal mouldings. This vessel has broken where the second moulding may have begun. The interior surface is grey, the exterior orange. At Prae Wood both types date between 5–0 AD.

21. Fabric 46p. Copy of a Gallo-Belgic form Cam. 12; Type G1–7, a platter with convex outsplayed walls and one internal offset. The type began before the conquest; romanised versions appeared by the third quarter of the first century AD. This vessel is black/dark grey in colouring, perhaps in an attempt to copy the original Terra Nigra.

22. Fabric 47a. A platter not related to the Camulodunum series. It is decorated with multiple grooves on the exterior, the interior has a single moulding. The fabric is totally romanised.

Bowls

23. Fabric 46da. Plain shallow wide-mouthed bowl, possibly a Type G2–2; black core with buff-surfaces. The vessel is crude and thick but may have been wheel-made.

24. Fabric 46p. Wide-mouthed bowl with bead rim, brownish-grey in colour, romanised.

Jars/bowls

Wide mouthed jars or bowls, Types B1–1 or D1–1, were a basic form in Belgic pottery. They continued to be made after the conquest in romanised and Roman fabrics.

25. Fabric 9xy. Large proportion of black wide-mouthed bowl, decorated on the shoulder with a burnished band, demarcated by two grooves.

26. Fabric 46a. Not illustrated – four other rims similar in form to No 26, in various subdivisions of Fabric 46. One has been burnished.

27. Fabric 9xy. Rim fragment; one of similar form, in Fabric 9a not illustrated.

28. Fabric 46p. Burnished

29. Fabric 46p

30. Fabric 46p. Burnished

31. Fabric 46p. Decorated on the shoulder with a cordon and grooves.

32. Fabric 47a. Cordoned, grey sandy fabric with an orange hue over the exterior face.

33. Fabric 3c. Cordoned, grey sandy fabric with an orange core.

34. Fabric 9f. Cordoned, smooth black surfaces, lightly burnished.

Storage Jars
Type C6. The type emerged with the earliest appearance of grog-tempering and continued unchanged to the end of the first century AD.

35 and 36. Fabric 46a. Rim fragments only, orange-brown suraces, grey cored.

37. Fabric 46a. Storage jar, decorated below the shoulder with a row of round stab marks. The fabric is hard, the surface smooth and black.

38. Fabric 46k. Romanised fabric, sandy and hard, dark grey in colour. The shoulder band has been smoothed.

? Lids
39. Fabric 47j. Possibly a Type L7, a conical lid with a shallow hollow knob and slightly inturned rim. This was a standard native lid form, but the romanised fabric suggests that it may be a late copy.
Not illustrated – two possible lid fragments in Fabrics 9xy and 9j.

?Narrow-necked jar/flagon
40. Fabric 18a. Fine sandy white-ware. Partial flaking on the exterior face may have been caused by the loss of a handle.

Poppy-headed beaker
41. Fabric 9e/14. White-slipped dark-grey rim in a dense fine sandy fabric; perhaps a local or Northamptonshire example of the type manufactured at Highgate (Brown and Sheldon 1974, 229) between 90 and 120 AD. The form was current in Southern England from about 80 to 190 AD.

Fine Ware Jar
42. Fabric 34a. Brownish-buff mica-dusted jar with pressed out 'bosses'; most commonly found in the Flavian-Trajanic period, c. 69-117 AD (Greene 1979b).

GROUP 3 MK345 CONSTANTINE WAY Figs 7 and 8

This group from a ditch near the Bancroft Villa (RMK, 48) consists of 831 sherds, dated to the late first to early second century AD. The figure includes six pieces of samian, five of which are Southern Gaulish and date to the late first century AD and one which is Central Gaulish and Hadrianic-Antonine.

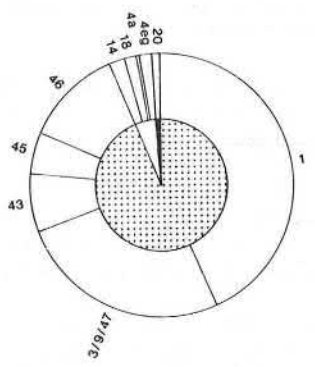

Fabric	*%*	*Fabric*	*%*
1.	44.0	14/33.	1.81
3/9/47.	26.11	18.	1.32
43.	7.10	4a.	0.12
45.	5.05	4eg.	1.20
46.	12.15	20.	0.72

PIE CHART 3: Percentages of Fabrics in Group 3.

Approxiamately sixty-four vessels in ten fabrics are represented; this consists of sixty different rims, and four distinctive body sherds. All the twenty jars in shell-gritted ware are of the lid-seated type and in this respect the group is very like Group 2.

These two groups however show a marked contrast in their major fabrics; in the earlier group the grogged 'Belgic' ware formed the largest percentage and occurred in a variety of forms but in this later assemblage the quantity of 'Belgic' grogged ware had fallen considerably and it appears only as storage jars and a single cup, beaker or flask (this looks out of place within the group and may be residual). The 'Belgic' grogged ware vessels were replaced by the totally romanised sand-tempered wares whose range of forms was not as great, consisting largely of wide-mouthed jars and bowls. Tableware, such as plat-

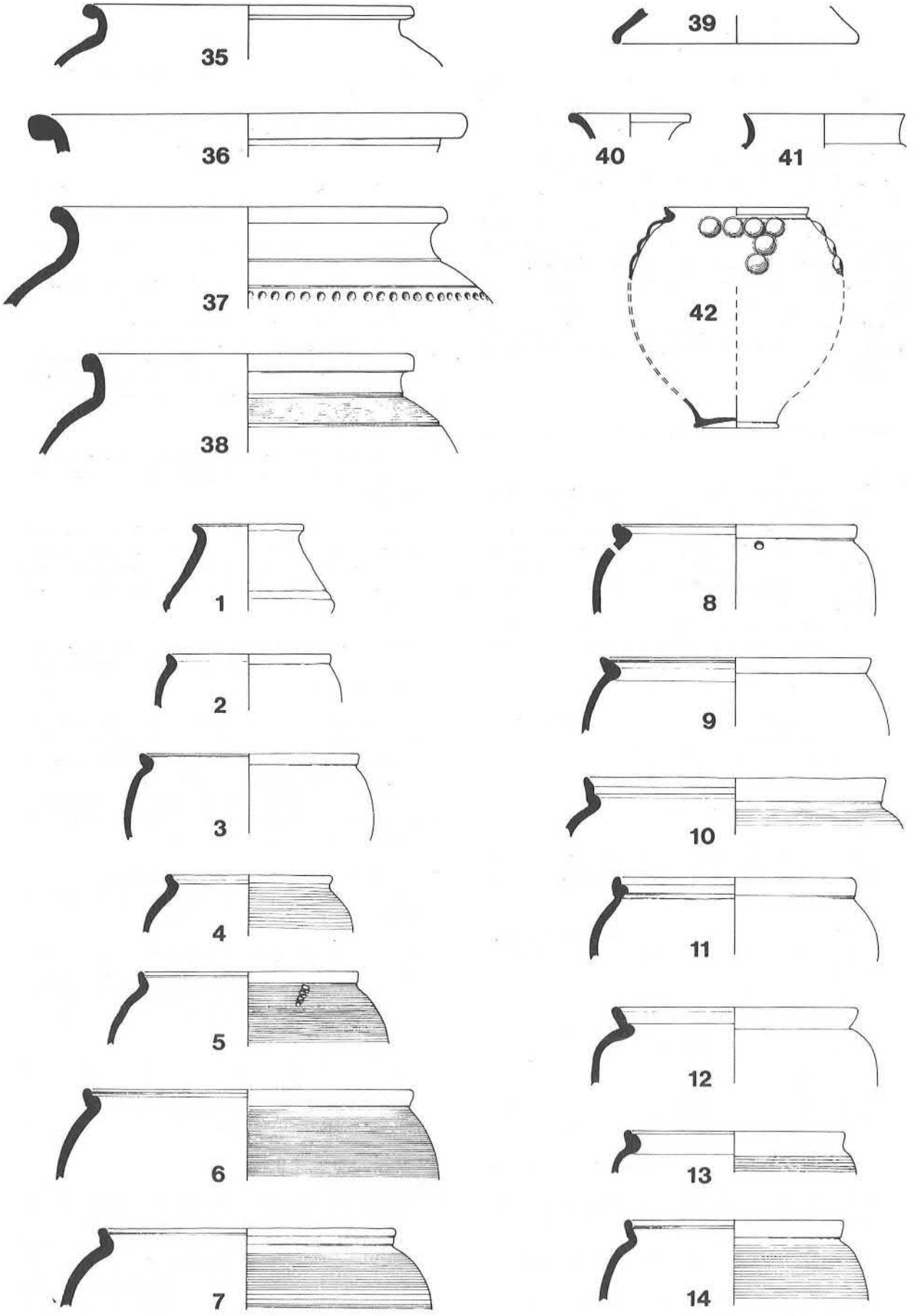

Figure 7: Pottery Group 2: early to mid to late first century, nos. 35–42
Pottery Group 3: late first to early second century, nos. 1–14,. (Scale 1:4).

ters, which on the earlier site had occurred in the 'Belgic' grogged fabric, appear on this site in samian. Cups and beakers are poorly represented.

This late first to early second century group also has a greater number of non-local wares than the mid to late first century Group I. In the latter only the mica-dusted 'bossed' jar and the white-ware vessel can be regarded as non-local, whereas this later assemblage produced samian, Verulamium white-wares, Upper Nene Valley material and an Oxfordshire mortarium sherd. Such goods may be a reflection of the building and maintenance of roads, especially the Watling Street and Alchester Road.

CATALOGUE: Fig 7, 1–14 and Fig 8, 15–39

Beaker/cup/flask

1. Fabric 46da. Handmade vessel, soft dense fabric, pale brownish-buff surfaces and dark grey core. It has an incipient ledge for lid-seating and a single cordon above the carination. The form is most closely related to Type E3–5; small narrow-mouthed everted-rimmed cups/beakers which are almost 'flasks'.

   Braughing and Prac Wood provide a long date range for this form, from 20 BC to 50 AD (Thompson 1982, 401). However, despite the 'Belgic' elements of this vessel it may not be a residual find; possibly it was a local copy of the carinated beaker typical of the Skeleton Green, Hertfordshire area in the late first-mid second century AD (Partridge 1981, Fig. 97, 44–48).

Lid-seated jars

2. Fabric 1a. Crude wheel-made vessel without a properly formed lid-seating; totally blackened on the outside face with a patchy dark red-brown/black interior.

3. Fabric 1a. Properly formed lid-seating; blackened exterior face with a patchy light red-brown/black inner face.

   Not illustrated – three similar vessels.

4. Fabric 1a. Coarsely rilled black exterior; orange-brown inner face patchily blackened.

   Not illustrated – one similar vessel.

5. Fabric 1a. Soot encrusted black exterior with blackened orange-brown interior. An illiterate stamp has been applied below the rim.

   Not illustrated – two similar vessels (unstamped)

6. Fabric 1a. Finely rilled pinkish-orange vessel, only slightly blackened over the upper rim surfaces.

7. Fabric 1a. Greyish-brown with slight blackening.

8. Fabric 1a. Blackened exterior, buff interior. Pierced by a ?suspension hole.

   Not illustrated – two similar vessels; one in Fabric 1 with pale orange surfaces and a grey core, the other in Fabric 43a with pinkish-buff surfaces blackened on the exterior.

9. Fabric 1a. Blackened exterior; pale orange interior.

   Not illustrated – four similar vessels.

10. Fabric 1a. Widely-rilled light orange vessel slightly blackened over the exterior and upper inner rim.

11,12. Fabric 9xy. Black surfaced sand-tempered vessels.

13. Fabric 45. Brownish-orange vessel blackened on both surfaces.

    Not illustrated – one similar vessel.

14. Fabric 45. Brownish-orange interior surface with an exterior that varies considerably in colour from dark brown through orange to a pale yellowish grey.

Bowls

15. Fabric 43f. Pinkish-buff lid-seated bowl with a dark-grey core; some traces of smoothing are visible over the girth and rim.

16. Fabric 46p. Squat globular neckless bowl with everted rim and short shoulder, its surface colour varies from dark-brown to black with a pink 'underskin' and dark-grey core. The form is not common.

17. Fabric 14c. Large vessel similar to the above, in a sandy fabric with dark grey speckled surfaces and a pale brownish-pink core.

18. Fabric 14/33. Small bowl with out-turned rim upturned at tip. Very sandy white fabric with speckled white/blue-grey surfaces; where smoothed, as under the rim, white streaks are apparent.

    At Brixworth, Northants such vessels were quite common in the Flavian-Trajanic periods, 69-117 AD (Woods 1970, 14; Fig 12, 61–65).

19. Fabric 47dg. Smaller bowl, yellowish-grey surfaces with a pale grey core; although sandy the fabric is fairly soft. This is a local example of the above.

20. Fabric 14c. Straight-sided bowl decorated with a single cordon in a sandy fabric with dark-grey speckled surfaces; the pale brownish-pink core contains a grey-white central vein.

Platter/lid

21. Fabric 43g.Pinkish-buff sandy fabric with lines of smoothing on the inner face; these lines have fired a streaky pale-pink and orange-brown. Areas of burning are visible on the exterior face and part of the core.

Wide-mouthed jars

22. Fabric 43f. Almost complete jar, brownish-buff fabric with a grey core, blackened on the exterior face. It may be related to the series of jars with grooved or cordoned necks found at Brixworth, Northants, especially to the more decorative 'Type B' which arrived at Brixworth in the Flavian period (c. 69-96 AD) but did not really become common until Hadrianic and early Antonine times (117 to c. 160 AD) (Woods 1980, 18) 109–35

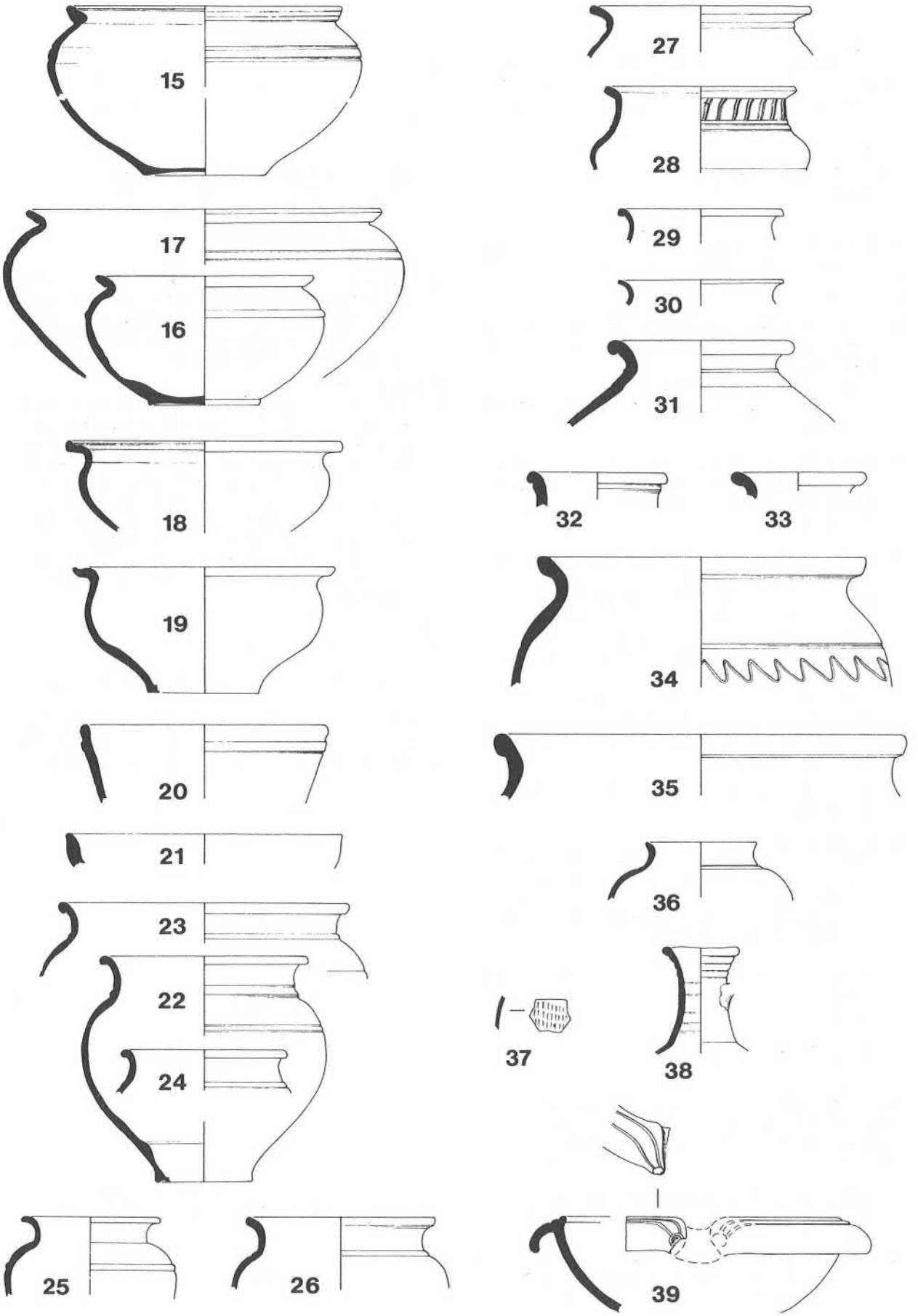

Figure 8: Pottery Group 3: nos. 15–39 late first to early second century, (Scale 1:4).

Not illustrated – two vessels probably similar to the one above, one in Fabric 47c, fairly soft with thin orange-brown surface colouring speckled with dark grey and the other in Fabric 43f buff with a grey core.

23 and 24. Fabric 47dg. Yellowish-grey surfaces with a pale yellowish grey core.

25. Fabric 47c. Brownish-orange surface with light grey inclusions showing through; grey core.

26. Fabric 9g/12. Wide-mouthed vessel with a thin black surface colour. The core varies from a dark pinkish-brown to buff.

Not illustrated – a similar vessel in Fabric 47dg – yellowish-grey surfaces, fairly sandy, with a medium grey core.

27. Fabric 14c. A neckless jar or bowl with a sharply out-turned rim in a very sandy blue-grey and white speckled fabric with a brownish-pink core. The rim has been burnt.

28. Fabric 9f. Black surfaced fine sandy wide-mouthed jar or bowl with an everted rim and shoulder bulge, derived from the 'Belgic' form Cam. 218. The type Cam. 218B was commonly found in Roman ware; associated forms attest its continuance into the second century (Hawkes and Hull 1947, 261).

29. Fabric 3k. Fine sandy greyware.
Not illustrated – two similar rims to the above, one in Fabric 47dg with brown surfaces and a blue-grey core, the other in Fabric 9e/14, black throughout.

30. Fabric 47j. Thin delicate rim, brownish-orange with a grey core.

Narrow-necked jars

31. Fabric 47c. Brownish-grey surfaces with a blue-grey core; fairly soft. The type, related to Cam. 231B with its weak 'false' cordoning and overhanging rim, had appeared in Roman greywares by the Flavian period (69-96 AD) (Thompson 1982, 171).

32. Fabric 9f. Black-surfaced vessel with a dark brownish-pink 'underskin' and a light brownish-orange core.

33. Fabric 3k. Fine sandy light greyware.

Storage jars

All three of these are in a 'Belgic' grogged fabric. This fabric and form appears to have survived virtually unchanged to the end of the first century AD (Thompson 1982, 259).

34. Fabric 46j. A fairly bright-orange outer face with a brownish-yellow interior and a dark blue-grey core. Soft.

Not illustrated – a similar vessel but much larger and in Fabric 46a. It has brownish-orange surfaces with a dark grey core.

35. Fabric 46a. Brownish-orange surfaces, dark grey core.

Beakers

36. Fabric 3k. Fine sandy, yellowish-grey throughout with the remains of a thin black or dark grey slip on both faces.

37. Fabric 3k. Rouletted body sherd, yellowish-grey with a blue-grey core and thin medium-grey slip. The piece is fairly fine and likely to have formed part of a beaker, although not apparently part of the one above.

Flagon

38. Fabric 18g. A granular ring-necked flagon rim with a pronounced top-ring. The outer surface is pale pink with a brownish-pink interior and pinkish-orange core. The pronounced top-ring is typical of late first to early second century vessels.

Mortaria

39. Fabric 4eg. Sandy, greyish-cream fabric packed with mostly quartz inclusions which are not perhaps quite as well sorted as the Verulamium mortaria fabric (see description of Fabric 4g, page 132), but the fabric and trituration grit are closely similar. Trituration consists of very small pieces of flint and quartz. Probably made in the Northants/Beds/Bucks area, date late first or second century AD.

Not illustrated – Body sherd of an Oxford whiteware mortarium (Fabric 4a); the type began about 100 AD (Young 1977).

Samian

See report by H. Pengelly, page 156.

GROUP 4 MK307 LOUGHTON VALLEY Fig. 9

This group is composed of 511 sherds from a late first to mid second century AD ditch (RMK, 46) which had been sealed by a reddish-brown hill wash.

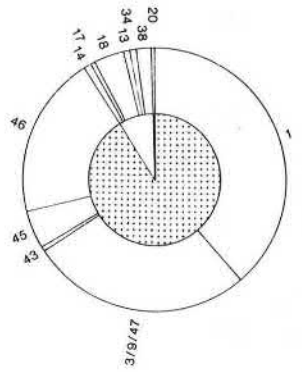

Fabric	%	*Fabric*	%
1.	38.75	17c.	0.39
3/9/47.	27.79	18.	3.91
43.	0.59	13.	0.59
45.	4.50	34.	0.59
46.	19.76	38.	2.15
14.	0.78	20.	0.20

PIE CHART 4: Percentages of Fabrics in Group 4.

Only one piece of samian was recovered, dating to the Hadrianic-early Antonine period. The group also produced a mica-dusted rim, No 25, probably very like the jar with pressed-out bosses from Cotton Valley, Group 2, Fig. 7, 42. Such vessels are most commonly dated to the Flavian-Trajanic period, 69-117 AD (Greene 1979b).

Approximately thirty-seven vessels were represented, thirty-one as rims, the remainder as distinctively individual body sherds. As in the preceeding groups the lid-seated form dominates the group, equalling fifteen vessels in all, nine in Fabric 1 shelly ware, five in grey/black sand tempered ware and one in a mixed grogged-shelly ware (Fabric 45). The shelly ware fabric again dominated, although showing a slight decline in vessel numbers possibly due to the appearance of shell-tempered wide-mouthed necked jars/bowls and a wider availability of other goods. In both the earlier groups (Groups 2 and 3), lid seated jars in Fabric 1 equalled almost a third of the total; in this group they equal less than a quarter.

The percentage for Fabric 46 is high due to a considerable quantity of the later subgroup 46qr (the earlier 46a equals only 7.24% of the entire 19.76%). Both rims are from wide-mouthed jars or bowls ie No 16 (one not illustrated).

The grey/black sand-tempered wares are the second dominant fabric, echoing the pattern seen in the earlier Group 3. The forms are similar, being black lid-seated vessels and wide-mouthed necked jars or bowls.

Storage jars, platters, dishes and neckless bowls are either not present at all or are only poorly represented; neckless bowls for instance may number two or three. Beakers are more common, equalling five; all but one appear to have been of non-local production. Such non-local wares occurred in greater variety than in the earlier groups, there being two lead-glazed vessels (apparently from different sources, including one from Central Gaul) a mica-dusted beaker, a small quantity of Upper Nene material and some fine white wares.

CATALOGUE: Fig 9, 1–30

Lid-seated jars

1. Fabric 1a. Tall, angular rim, blackened exterior, brownish-orange inner face.

2. Fabric 1a. Almost totally blackened apart from the area of purplish-brown colouring on the interior. Soot encrusted on the seating ledge.
   Not illustrated – one similar vessel in Fabric 45.

3. Fabric 1a. Pale brownish-pink throughout with irregular areas of blackening.
   Not illustrated – one similar vessel.

4. Fabric 1a. Pale brownish-pink on both surfaces, grey core.
   Not illustrated – two similar vessels.

5. Fabric 1a. Well rounded rim; coarsely rilled blackened exterior with brownish-orange interior.

6. Fabric 1a. Well rounded rim on which the normal dropped-level seating ledge has been replaced by a skeuomorphic groove; the surfaces are pinkish-orange, slightly blackened on the exterior.

7. Fabric 9a. As on the above the ledge has been replaced by a groove; the surfaces are black with a yellowish-grey core. The fabric is coarser than the more common Fabric 9a.

8. Fabric 9xy. Slight soot encrustion on the inner rim; black surfaces, red underskin, and grey/black core.

9. Fabric 47dg. Orange-brown surfaces black and grey in patches with a yellowish-grey core.
   Not illustrated – one similar vessel in Fabric 9xy.

10. Fabric 9xy. Soot encrusted black outer face with a blackened orange-brown interior, black core.

Wide-mouthed jars/bowls

11. Fabric 1a. Light orange surfaces, grey core

12. Fabric 1a. Brownish-orange surfaces, patchily darkened with grey on the exterior. Decorated with a cordon and double grooves. The form and decoration are unusual for this fabric.

13. Fabric 45. Brownish-orange surfaces with areas of burning on the upper shoulder and rim. Cordoned.

14. Fabric 47dg. Brownish-grey surfaces with an unevenly fired blue-grey and orange core. Cordoned.
    Not illustrated – one similar vessel.

15. Fabric 46a. Fragment only, of arbitrary diameter; orange-brown surfaces with a soft grey core.

16. Fabric 46qr. Black outer face with oxidised underskin, reddish-brown interior and grey core. The fabric is very similar to Fabric 9xy.

17. Fabric 9a. Unevenly coloured black and yellowish-grey surfaces; dark grey core.

18. Fabric 9f. Black exterior with dark pinkish-brown underskin and interior surface; grey core.

19. Fabric 47j. Orange surfaces with a cream underskin and grey core.

20. Fabric 47k.Coarse open texture, orange in colour throughout.

21. Fabric 43f. Fragment only. Brownish-buff surfaces with a purplish-brown core.

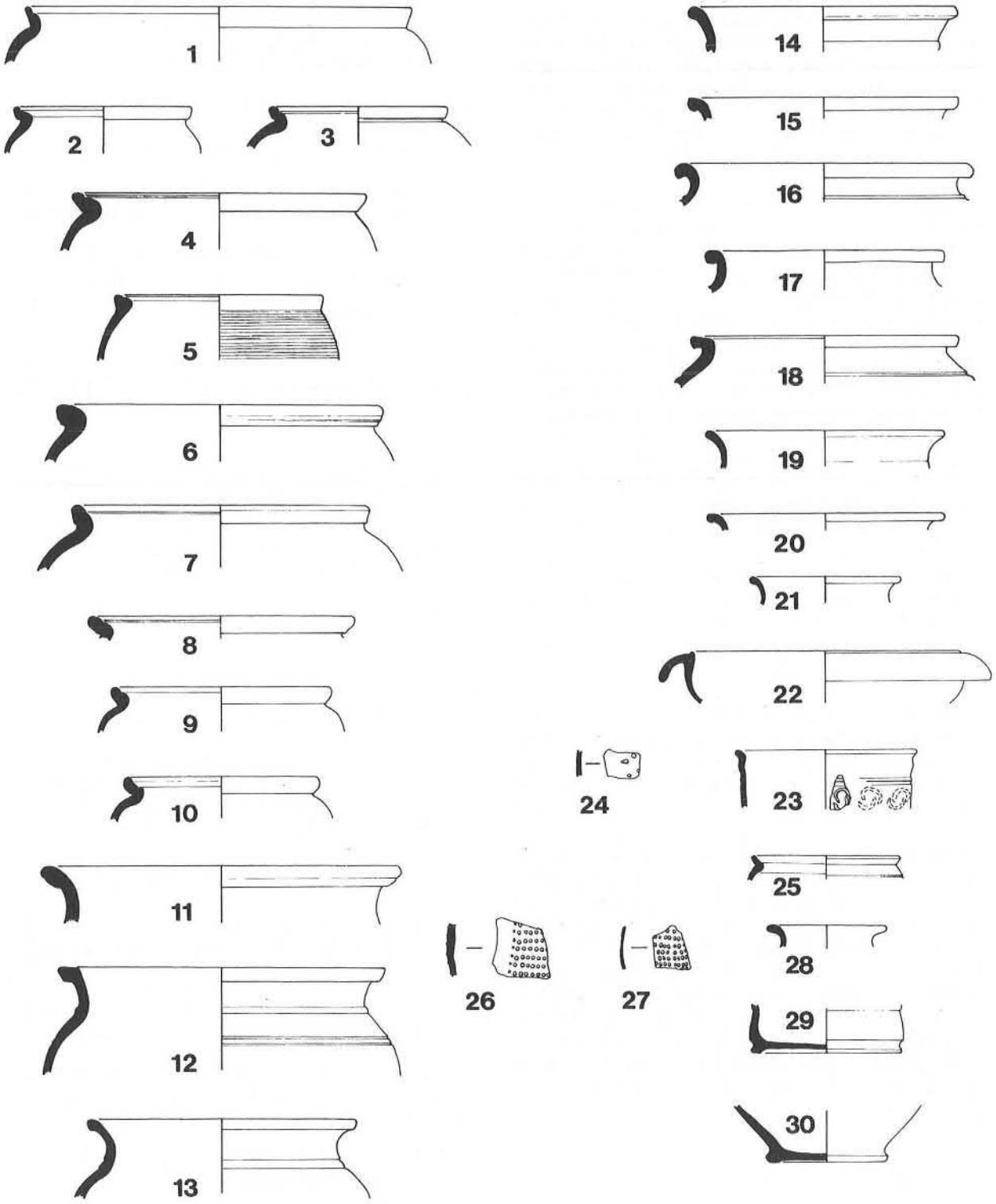

Figure 9: Pottery Group 4: late first to mid second century, (Scale 1:4).

Bowls

22. Fabric 38, Fine orange surfaces, vessel slightly discoloured on the lower part of the flange; pale grey core. Although not an Oxford fabric the same form was produced in the Oxfordshire kilns between 50 and 150 AD (Types 0.39 and 0.40; Young 1977, 196).

23. Fabric 13b. Very soft bright orange fabric with self-coloured barbotine or relief moulded decoration covered by a white slip and green lead-glaze. The form may be imitating a Dr. 37 or Dr. 30 (P. Arthur, pers. comm.). Lead-glazed wares were circulated with the Roman army from c. 43 to 70 AD and were occasionally manufactured in Britain, particularly in the late first and early second centuries (Swan 1975, 10).

Beakers

24. Fabric 13c. St Rémy ware, Central Gaulish. Soft white body sherd with cream coloured surfaces. The outer face is decorated with white barbotine dots; only the inner face retains traces of a greenish-yellow lead glaze. Probably part of a large beaker (c.f. Greene 1979a, Fig 42, 16). The type is mainly pre-70 but is also known from the Flavian period.

25. Fabric 34a. Brownish-buff mica-dusted rim. The fabric is identical to that of vessel No 42 in Group 2, and the form was probably similar. Such types were most common in the Flavian-Trajanic period, 69-117 AD.

26. Fabric 14a. Fine hard sandy grey body sherd from a poppy-headed beaker. The piece is decorated with a panel of self-coloured barbotine dots and has the remains of a thin white slip on the outer face only. The form was current in Southern England from about 80 to 190 AD (Swan 1975, 14).

27. Fabric 3k. Soft, fine sandy poppy-headed beaker sherd. The outer face is dark grey to black and decorated with small self-coloured barbotine dots; the inner face is a light yellowish-grey.

    Not illustrated – beaker base in Fabric 17c; buff to pink surfaces streaked with grey; blue-grey core.

?Narrow-necked jar/flagon

28. Fabric 18a. Soft white fabric with unevenly coloured grey surfaces; the sherd is worn and it is difficult to determine whether such colouring was intentional. The fabric is very similar to that of Fabric 12 but has not been put into this category because of the uncertainty over the surface finish.

29. Possible base to the above. The fabric is identical except that on the base sherds the exterior is white and the interior grey.

30. Fabric 18a. Slightly sandy whiteware base with patches of brown staining on the outer face.

Samian

See report by H. Pengelly, page 156.

GROUP 5 MK44 CALDECOTTE Fig. 10

This is a fairly small group of 384 sherds dating approximately from the first to the third quarter of the second century AD. They were recovered from F92, a large ditch (of which only a short section was excavated) which formed part of a system of land division within a small agricultural and industrial settlement, dividing an area of bronze and iron-working from the fields to the south. Publication of this site will be in a later monograph volume.

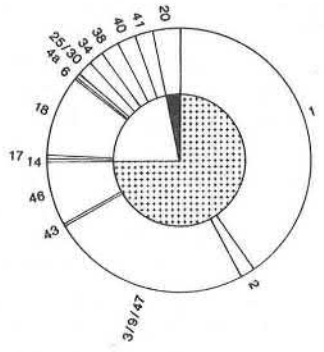

Fabric	%	*Fabric*	%	*Fabric*	%
1.	40.10	14/33	0.26	25/30.	1.82
2.	1.82	17c.	0.26	34.	1.82
3/9/47/	24.99	18	10.16	38.	2.08
43.	0.26	6.	0.26	40.	2.34
46.	8.07	4a.	0.26	41.	2.08
				20.	3.39

PIE CHART 5: Percentages of Fabrics in Group 5.

The pottery includes thirteen pieces of samian (3.39%) all products of the Hadrianic-Antonine or Antonine period; some decorated sherds gave a date of about 150–180 AD. The group also contains a small indented mica-dusted beaker, No 21, one of the more common forms of the early second century. During this period mica-dusted wares became widespread in Britain, being produced at London and Holt and doubtless many other places (Marsh 1978, 122).

A date within the first half of the second century was indicated for the beginning of the group by the Hadrianic samian and the presence of a hemispherical beaded-rim bowl, No 9, so typical in form (though not in fabric) of these produced in London in the early second century AD (Marsh 1978 Fig 6, 19, Type 42), by rim No 17 in the essentially early to mid second century Fabric 43, and by the large quantity of Fabric 47 and later subgroups of 46. Both of the latter may have been products of the local Caldecotte kiln II, dated late first to mid second century.

A terminal date for the assemblage was suggested by the paucity of Fabric 2, which flooded the market in the later second century and the extremely low percentage for the colour coated Nene Valley ware.

The rim sherds of twenty-eight individual vessels were recovered; distinctive body sherds enlarge this total to a possible thirty-eight. As in all but the latest second-century assemblages, Fabric 1 shelly ware dominated. Surprisingly there are only two shell-tempered lid-seated cooking pots plus two of the same form in different fabrics. In comparison to other second-century groups this number of lid-seated cooking pots is low; such a fact was initially thought to emphasize the 'workplace' nature of this assemblage. The preponderance of bowls and dishes (ten) and necked jars/bowls (ten) suggested that storage and the consumption of food was of greater concern to the users of the pottery than food preparation (whilst the samian gaming counters may perhaps offer an insight into the less productive pursuits enjoyed by the workmen during a meal break). However, the next assemblage within this sequence, Group 6, a pit group of mid to late second century date from within an area of occupation, shows the same low level of lid-seated cooking-pots and large number of bowls, dishes and jars. Thus, rather than reflecting a 'workplace' group, this pottery may merely reflect the decline in popularity of the lid-seated form.

Although the shell-tempered wares are not common in the form of lid-seated vessels they do occur as wide-mouthed necked jars and storage jars. In the latter form they have ousted the once common Fabric 46 storage jars. Unlike other assemblages where the fabric, quantity and number of vessels generally reflect one another, in this group there are only eight shell-tempered vessels and yet thirteen in the sand-tempered grey and black wares. The higher percentage of the former may be due to the remains of the storage jars; it is however a percentage level well in keeping with the other second-century groups.

There are two factors which may explain the large quantity of sand-tempered vessels in the group; the first, and most obvious, being that they appear to have been produced within the Caldecotte area. The second is that bowls and dishes, which form a major proportion of the group, are not commonly found in shell-tempered ware in early to mid second century features within Milton Keynes.

The grey-and-black sand-tempered wares are varied in form, ranging from a large lid-seated pot to wide-mouthed necked jars, dishes, bowls, a bottle or flask and a large beaker. There is also a sherd of a possible poppy-headed beaker in one of the finer greyware subgroups (3k). The bead-rimmed dish No 6 has traces of intersecting arc decoration; a similar but larger example was dated 155/160 AD at Verulamium (Frere 1984, 275, 1006).

The group also includes one flagon handle and two bottle or flask rims. The handle, No 22, is in a granular fabric which bears close similarities to both Brockley Hill and Upper Nene Valley products (18g and 17c).

Beakers equal four in number, although the large beaker-type vessel, No 20 in Fabric 47j may perhaps more accurately be described as a neckless jar. Two are non-local (the mica-dusted indented beaker and the beaker sherd from a colour-coated Lower Nene Valley vessel).

For a pottery group in a relatively rural area supplied with its own kiln(s) the non-local products are not as rare as one might expect. The foreign imports are admittedly confined to Central Gaulish samian, but the British wares came from as far afield as the Lower and Upper Nene Valley, ? Brockley Hill, Greater London or the Verulamium region, Oxfordshire, Bedfordshire (a likely source for the shell-tempered wares) and from sources unknown for the mica-dusted beaker and hemispherical bowl.

CATALOGUE: Fig 10, 1–22

Lid-seated jars

1. Fabric 46da. Brownish-orange surfaces, black core. Virtually untempered. Wheelmade.

2. Fabric 1a. Blackened outer face, pale pinkish-buff interior.
   Not illustrated – one similar vessel.

3. Fabric 47j. Light brown and brownish-orange surfaces with some blackening on the outer face, grey core.

Dishes/bowls

4. Fabric 3k. Shallow with sagging base and small pointed rim; brownish-grey surfaces and light grey core.

5. Fabric 47dg. Worn yellowish-grey surfaces with irregular black patches, red-brown underskin and grey core. May have doubled as a lid.

6. ?Fabric 3gj. Heavily burnt, fabric difficult to determine. Bead rim, lightly scored arc decoration, faint traces of burnishing.

7. Fabric 9xy. Black surfaces, lightly smoothed on the outer face, reddish-brown core.

8. Fabric 9xy. Black surfaces, burnished on the exterior; red underskin with a grey core.

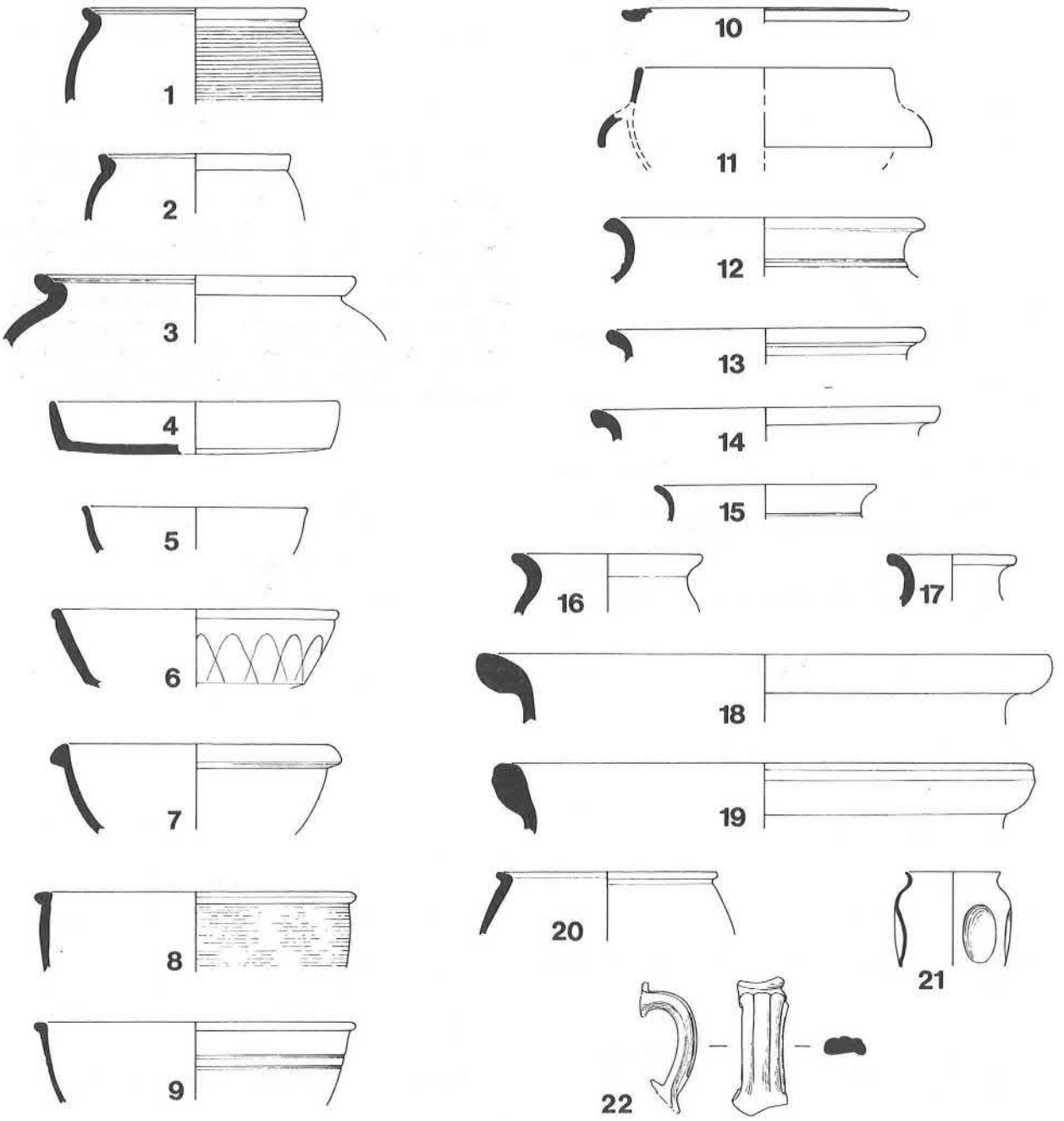

Figure 10: Pottery Group 5: early to third quarter of second century, (Scale 1:4).

9. Fabric 38. Fine pale orange outer face, patchily fired light-grey and reddish-pink inner face, light grey core.

10. Fabric 18c. Rim fragment of a reeded-rim bowl; off-white surfaces blackened on the outer edge and in core.

11. Fabric 40a. Cream surfaces with pinkish-orange core, trace of a samian-coloured slip. Copy of a Dr. 38.

Wide-mouthed jars/bowls

12. Fabric 47j. Orange-brown inner face, brownish-grey exterior blackened in patches.

13. Fabric 9xy. Smooth black surfaces with a red core. Not illustrated – one similar but smaller.

14. Fabric 1a. Vesicular grey and pinkish-buff surfaces, grey core.
Not illustrated – three similar vessels, two in Fabric 1a and one rim fragment in Fabric 46a.

15. Fabric 3k. Light grey surfaces with pinkish hue, blue-grey core. Not illustrated – one similar in Fabric 3c.

16. Fabric 1a. Vesicular, blackened brown outer face, brownish-orange interior, grey core.

Narrow-necked vessels/bottles/flasks

17. Fabric 43f. Purplish-brown surfaces, core colour varies from orange to cream and grey.
Not illustrated – rim fragment of vessel probably of similar form in Fabric 47c.

Storage jars

18. Fabric 1a. Buff surfaces dark grey core.

19. Fabric 1a. Buff outer face, orange-brown interior, grey core.

Beakers

20. Fabric 47j. Large beaker, yellowish-grey outer face with a grey slurry, brownish-orange interior, light grey core.

21. Fabric 34c. Mica-dusted indented beaker, very pale orange surfaces, darker orange core.
Not illustrated – Fabric 3k greyware bodysherd partly decorated with self-coloured barbotine dots. Fabric 6 Lower Nene Valley beaker body sherd with light-brown colour-coat.

Flagon handle

22. Fabric 17c or 18g. Granular, pale orange throughout.

Mortaria

Not illustrated – Fabric 4a, flange sherd of an Oxford white-ware mortarium; burnt. Dated by Kay Hartley to 140–200 AD.

Samian

See report by H. Pengelly, page 157.

GROUP 6, MK297 WOUGHTON Figs. 11, 12 and 13

This is an assemblage of 847 sherds, dating to the mid to late second century AD. The material was recovered from a large irregular pit, F31 (RMK, 96) which cut similarly dated gullies, F35 and F32 (RMK Fig. 30). The adjacent settlement at this time (Phase II) saw the introduction of rectangular timber-framed buildings to supplement the native circular type. If such an introduction can be taken to mark the assimilation of Roman construction techniques by the native population, the pottery within this group further confirms such romanisation for it is a rich varied assemblage, almost 23% of which is composed of continental imports.

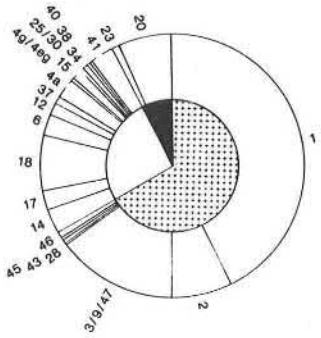

Fabric	%	Fabric	%	Fabric	%
1.	42.86	17.	2.24	15	1.18
2.	7.32	18.	6.96	25/30	0.24
3/9/47.	4.88	6.	2.59	34.	0.59
28.	0.12	12.	1.42	38.	0.24
43.	0.47	37.	0.94	40.	0.24
45.	0.24	4a.	1.77	41.	2.83
46.	0.83	4g/4e	0.71	23b&c	0.94
14.	3.07			20.	7.91

PIE CHART 6: Percentages of Fabrics in Group 6.

The group has been dated by distinctive wares and forms of both continental and British origin. The continental wares include approximately twenty-nine samian vessels from both Central and Southern Gaul, the majority of which were from Central Gaul and Antonine in date although a single bowl dates to the Flavian period. Other imports include a metallic black-slipped handled vessel from Central Gaul, dated by Dr. Kevin Greene to around the mid-second century and a roughcast beaker from the ?Lower Rhineland dated to between 70–120 AD. The presence of two or three earlier finewares may be due to the heirloom factor.

British indicators of a date for the group are the finely-moulded cornice-rim Nene Valley colour-

coated beakers (such rims were in decline by the late second century), the 'London ware' copy, the mortaria, and the percentage levels for the various wares, for example the low quantity of fabric 2 (7.34%) which began to dominate the market at sometime within the late second to early third centuries. The form of the lid-seating on the shell-tempered cooking pots also suggests a mid to late second-century date. This common second century form is represented by fifteen vessels in Fabric 1 and one in Fabric 3, that is roughly a ninth of the 133–140 vessels within the group (a similar level to that in Group 5).

As in the previous groups the assemblage is dominated by the shell-tempered ware. This occurs in both the more common forms and in forms not previously noted in this fabric, namely neckless bowls/dishes and narrow-mouthed jars. This diversification may account for the level of the sand-tempered wares which is lower than usual for a group of this date. There are, for example, seven shell-tempered bowls and dishes which would more normally have been in a sand-tempered fabric. In total there appear to have been some thirty-nine shell-tempered vessels and twenty in local sandy grey and black wares. The forms of the latter are not as varied as in the previous group, there being a lack of the narrow-necked flask or bottle type of vessel. There are however twelve dishes or bowls (including one in Fabric 28), six necked jars or bowls, a lid-seated pot and a single beaker rim sherd. Two body sherds from fairly substantial vessels bear traces of white or grey barbotine dots whilst other pieces have smoothed lines of lattice decoration.

The group contains many other vessels of interest. The dark orange bowls identified as early Hadham ware are exceptional in this area and show a continued trade with the Hertfordshire/Verulamium region. Despite this, the number of other vessels within the group attributable to this area is small; only one flagon handle is almost certainly a Brockley Hill product. The remaining white and pink wares are difficult to attribute to a source, although it seems probable that most would have originated in the Upper/Middle Nene Valley. One incomplete rim sherd (not illustrated) has painted decoration, a tradition of some standing in Northamptonshire (Woods 1970, 36). The mortaria however are predominantly from the Oxford kilns, with the major proportion of the remainder being either Oxford or Northants in origin. Only one mortarium may possibly be from the Verulamium region, although again Northants is a more probable source.

The fine greywares, consisting of beakers, bowls and dishes, appear to be products of Northamptonshire and the Lower Nene Valley. The internal groove at the junction of wall and base is a feature frequently found on Ecton vessels (Johnson 1969, 81) and if these same potters migrated to the Lower Nene as has been suggested (Howe *et al* 1980, 6) this feature is likely to reoccur.

The orangeware beakers are also thought to be Northamptonshire/Upper Nene Valley products; similar examples can be found in the Brixworth report (Woods 1970, Fig 21, 148–149), Towcester (Brown and Alexander 1982, Fig 11, 99-100, 112–114) and at Biddlesden, North Bucks (Woods et al 1981, Fig 22, 4–6 and 14b) where colour washes were also commonly used.

The group also contained two mica-dusted vessels, a dish and an indented beaker. The latter is fairly fine and a common early second century form whilst the former is possibly a bad imitation of a samian form Dr. 36. A better copy at Towcester was found with mid to late Antonine samian, (Brown and Woodfield 1983, Fig 20, 31).

The dominant vessel forms within this assemblage are bowls and dishes, approximately fifty in number (this includes nineteen samian bowls), whilst jars or necked bowls are the second dominant form with a possible twenty-five vessels. Beakers are well represented with sixteen; there are also sixteen lid-seated jars, eight samian cups, possibly five mortaria, six narrow-necked or enclosed vessels (two of these are samian), three storage jars and two possible flagons or jugs, represented by handle fragments only. Considering the number of drinking vessels within the group (sixteen beakers and eight cups) a dearth of flagons, jugs or bottle remnants is noticeable. There is also an absence of lids.

The non-local wares from the group form a large proportion; roughly a third with the exclusion of the shell-tempered ware. The latter causes some confusion; logically one imagines cooking-pots to be very local products whereas a possible source of much of the shell-tempered pottery is Harrold, Bedfordshire, approx. 10–12 miles/16–19 kilometres away from the site. If Harrold is the source of the Milton Keynes material it is of some interest that the common cooking-pot was being brought in from a distance. However, it may be that kilns closer to this area were a major source, possibly Deanshanger or kilns yet undiscovered.

Although F31 cut a gully its contents form a good securely dated assemblage with only a handful of possible residual pieces (Fabrics 45 and 46). It is worth noting the differences between this group and that of the mid second-century pit group at Brixworth, Northants (Woods 1967, 9), where only four of the five hundred sherds were 'calcite' gritted, and groove-necked sand tempered jars were common. This almost total contrast of fabrics and form within a distance of 20 miles/32 kilometres

may indicate the strength of geographically determined boundaries such as the rivers Nene and the Ouse, possibly reinforced by administrative divisions.

For a pottery group from an agricultural settlement on what appears to be a bleak unrewarding upland,the variety and richness of Group 6 is initially surprising. However, both the introduction of the rectangular timber-framed buildings and the contents of the pit appear to be evidence of surplus wealth coupled with a desire for Roman objects and, perhaps, a more romanised life-style. Such indications suggest that the uplands were either more rewarding than initially supposed or that the occupiers of the site had other sources of income.

CATALOGUE: Fig 11, 1–29; Fig 12, 30–57 and Fig. 13, 58–82

Lid-seated jars
Cooking pots – most have blackened exterior faces and grey cores.

1,2 Fabric 1a. Pale greyish-pink

3. Fabric 1a. Brownish-pink

4. Fabric 1a.Pale greyish-pink
Not illustrated – one similar

5. Fabric 1a. Purplish-brown

6. Fabric 1a. Pale greyish-pink, lightly sooted
Not illustrated – one similar

7. Fabric 1a. Purplish-brown
Not illustrated – three similar

8. Fabric 1a. Pale pink inner face, grey exterior, orange core, lightly rilled

9. Fabric 1a. Pale greyish-pink, slightly sooted

10. Fabric 1a. Purplish-brown

11. Fabric 3c Medium grey surfaces, red core with grey central vein, not blackened on the outer face.

Bowls/dishes
12. Fabric 1a. Purplish-brown interior, lightly sooted blackened exterior, grey core, rilled

13. Fabric 1a. Pale greyish-pink surfaces, grey core

14. Fabric 1a. Buff surfaces, grey core

15. Fabric 1a. Greyish-pink surfaces, grey core

16. Fabric 1a. Orange surfaces, grey core

17. Fabric 1a. Greyish-pink surfaces, grey core

18. Fabric 1a. Pinkish-buff surfaces, grey core

19. Fabric 47a. Medium to dark grey surfaces burnished over rim, orange underskin with blue-grey core.

20. Fabric 34b Mica-dusted brown-buff surfaces, light grey core, some discolouration through burning.

21 and 22. Fabric 37. Medium orange surfaces bearing faint traces of linear burnishing, dark orange core. No 22 is a copy of a samian Dr 18/31; copies of samian in an orange Hadham fabric are thought to date from the Antonine period (Rodwell 1978, 260 and Fig. 7,16, No 120). These vessels are extremely unusual but both have been positively identified as Hadham products by Chris Going (Hadham publication forthcoming).

23. Fabric 9a. Black-slipped surfaces, blue-grey core.
Not illustrated – one similar but smaller.

24. Fabric 15 Micaceous black surfaces, dark brown-grey core.

25. Fabric 12. Light grey surfaces, white core (diameter arbitrary).
Not illustrated – one similar in Fabric 14b.

26. Fabric 18c. Cream coloured surfaces, burnt grey exterior. Similar vessels dated 135–85 AD at Verulamium (Frere 1984, 272, No 683).

27. Fabric 9a. Pinkish-grey surfaces covered with a thin grey wash, grey core.

28. Fabric 9a. Reddish-grey surfaces covered with a burnished black slip, fired white in places, dark grey core.

29. Fabric 47a. Blue-grey fabric with self-coloured slip; smoothing has caused this to fire a streaky white in places.

Fig. 12
30. Fabric 9a. Black burnished surfaces, sooted on the inner face, red underskin and grey core.

31. Fabric 47a. Blue-grey fabric with self-coloured slip.

32. Fabric 9a. Pinkish-grey surfaces with an unevenly fired black and white slip; lines have been scored into the vessel after firing.
Not illustrated – one similar black-surfaced 9a.

33. Fabric 12. Blue-grey surfaces, white core, internal groove at junction of wall and base. This feature is common on plain-rimmed dishes from Ecton, Northamptonshire (Johnson 1969, 81) and can also be found on Lower Nene Valley greyware (Howe *et al* 1980, Fig 2, 19).

34. Fabric 47a. Blue-grey fabric with self-coloured slip.
Not illustrated – one similar in Fabric 28a, black slipped on exterior face.

35. Fabric 15. 'London ware' copy imitating samian form Dr 37. Micaceous smooth dark grey/black surfaces, whitish-grey core; decorated with scored compass drawn lines (cf. Frere 1984, 273, No 694, dated 100–160 AD).

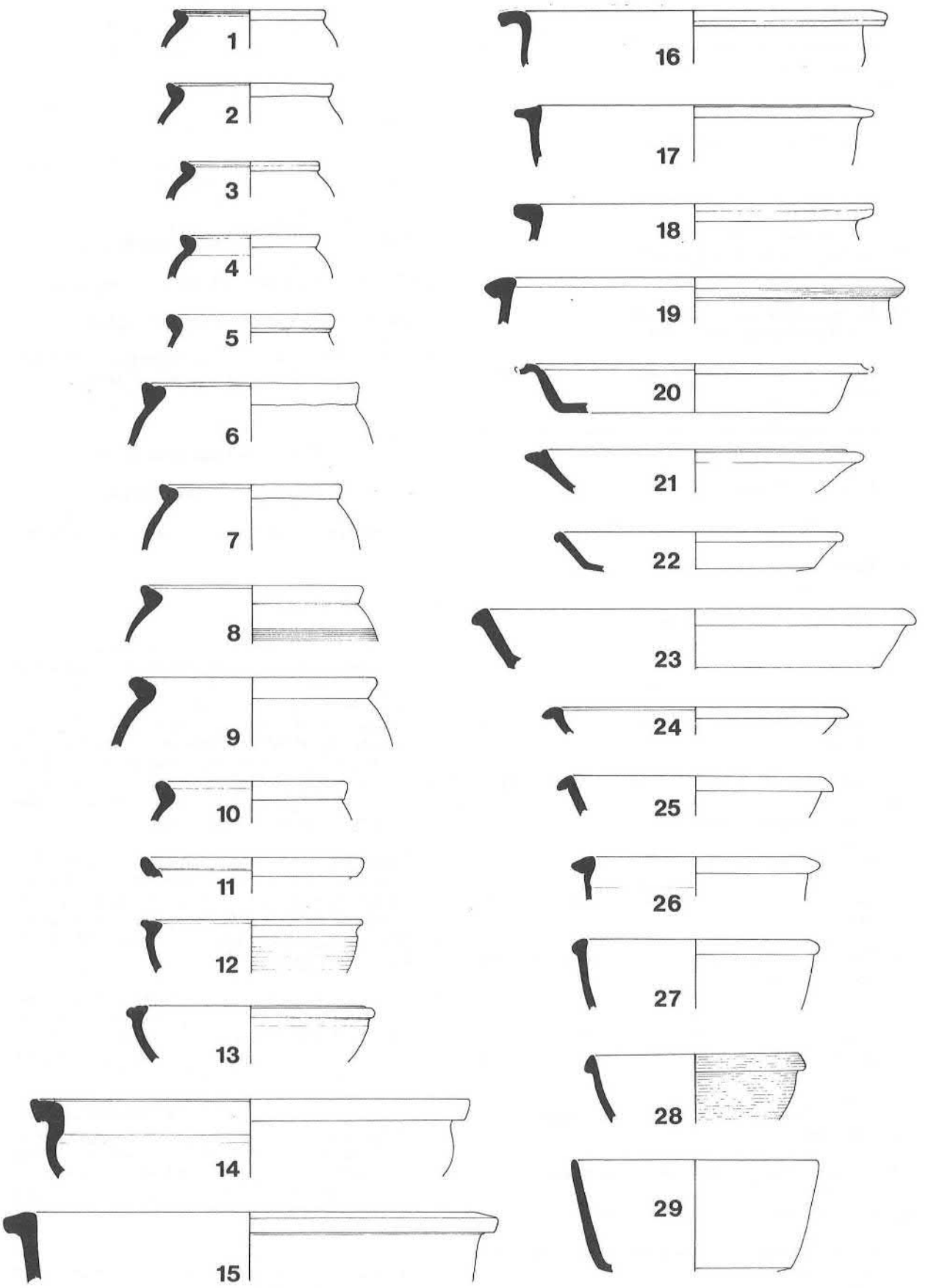

Figure 11: Pottery Group 6: mid to late second century, (Scale 1:4).

36. Fabric 38. Copy of a Dr 37 with a double bead; brownish-orange surfaces with a grey core. One sherd has been heavily burnt.

37. Fabric 2a. Pale pink-orange surfaces with a grey core.
Not illustrated – one similar.

Wide-mouthed necked jars/bowls

38. Fabric 2a. Pink surfaces, exterior covered with a thin white slip, self-coloured core.

39. Fabric 1a. Grey-pink surfaces, grey core.
Not illustrated – one similar.

40. Fabric 38. Light brown-orange surfaces, thin off-white core.

41. Fabric 14b. Hard, medium grey surfaces, blue-grey core.

42. Fabric 18c. White fabric, thin yellow-grey slip.

43. Fabric 18c. Pink surfaces, off-white core.

44. Fabric 1a. Grey-pink surfaces, grey core.

45. Fabric 1a. Blackened purplish-brown outer face, pale pinkish-grey interior, grey core.

46. Fabric 1a. Light grey exterior, light pink inner face, grey core.

47. Fabric 1a. Dark grey outer face, light grey interior and core.

48. Fabric 1a. Blackened exterior, sooted, purple-brown inner face.
Not illustrated – one similar.

49. Fabric 1a. Greyish-white surfaces, pink core.

50. Fabric 1a. Grey outer face and core, pale pink inner face.

51. Fabric 1a. Blackened exterior, light greyish-pink inner face, grey core.

52. Fabric 1a. Black surfaces and core (the triangular overhanging rim and colouring of this very small sherd suggest that it may possibly be contamination from fourth-century levels).

53. Fabric 17c/18g. Hard granular orange surfaces, off-white core.

54. Fabric 3c. Surfaces medium grey to black, reddish-orange core.
Not illustrated – one similar in 9a.

55. Fabric 3c. Burnished blue-grey surfaces, possibly a slip, brownish-red core.

56. Fabric 47a. Medium grey surfaces, light blue-grey core. Diameter arbitrary.

57. Fabric 3c. Dark grey surfaces, brownish-pink core.
Not illustrated – one similar in Fabric 47a.

Fig. 13

58. Fabric 41b. Pinkish-orange fabric, slightly burnt, thin dark-brown wash over the outer face.

59. Fabric 40b. Pale orange surfaces with a darker orange core, traces of a red-brown slip.

Narrow-mouthed jars

60. Fabric 1a. Pale greyish-pink throughout.

61. Fabric 1a. Blackened buff surfaces, grey core.

62. Fabric 1a. Light redish-orange throughout.

63. Fabric 18b. Neck sherd only; light pink fabric, self-coloured core, impressed cordon decoration.

Storage jars

64. Fabric 2b. Brownish-orange surfaces, grey core.

65,66. Fabric 1a. Pale grey surfaces, grey core.

67. Fabric 1a. Pinkish-grey surfaces, pinkish-orange core.

Beakers

68. Fabric 23c. Yellowish-white fabric colour-coated on the exterior face with a metallic black to dark-brown slip; irregular orange-red patches. The interior is matt and dark brown in colour.
This vase-type vessel (cf. Simpson 1973, Fig 1, 29) has applied moulded decoration; it was produced in Central Gaul and has been dated by Dr. Kevin Greene to around the middle of the second century AD. This vessel very probably had two handles although only one was recovered.

69. Fabric 23b. White fabric with a slightly glossy black colour-coat, reddish-brown under the rim. The vessel has a finely-made cornice rim and clay particle roughcast decoration. It was produced in the Lower Rhineland, and the type dates to about 70–120 AD (Anderson 1980, Fig. 7, 1).

70. Fabric 6. Yellowish-white fabric with a matt brown-orange colour-coat; underslip barbotine decoration. The finely-moulded cornice rim indicates a date before the end of the second century AD (Howe *et al* 1980, 8). A Lower Nene Valley product.

71. Fabric 6. Yellowish-white fabric with a matt black colour-coat, fired reddish-brown where thin. 'Hunt-cup' underslip barbotine decoration. Finely moulded cornice rim; date and origin as above.
Not illustrated – part of another Nene Valley beaker with a very pale orange core and red-brown slip.

72. Fabric 17c. Dark orange fabric, medium grey outer face and grey streaked interior, cornice rim and rouletted. A similar vessel at Brixworth was dated late Antonine (Woods 1970. Fig 21. 149).

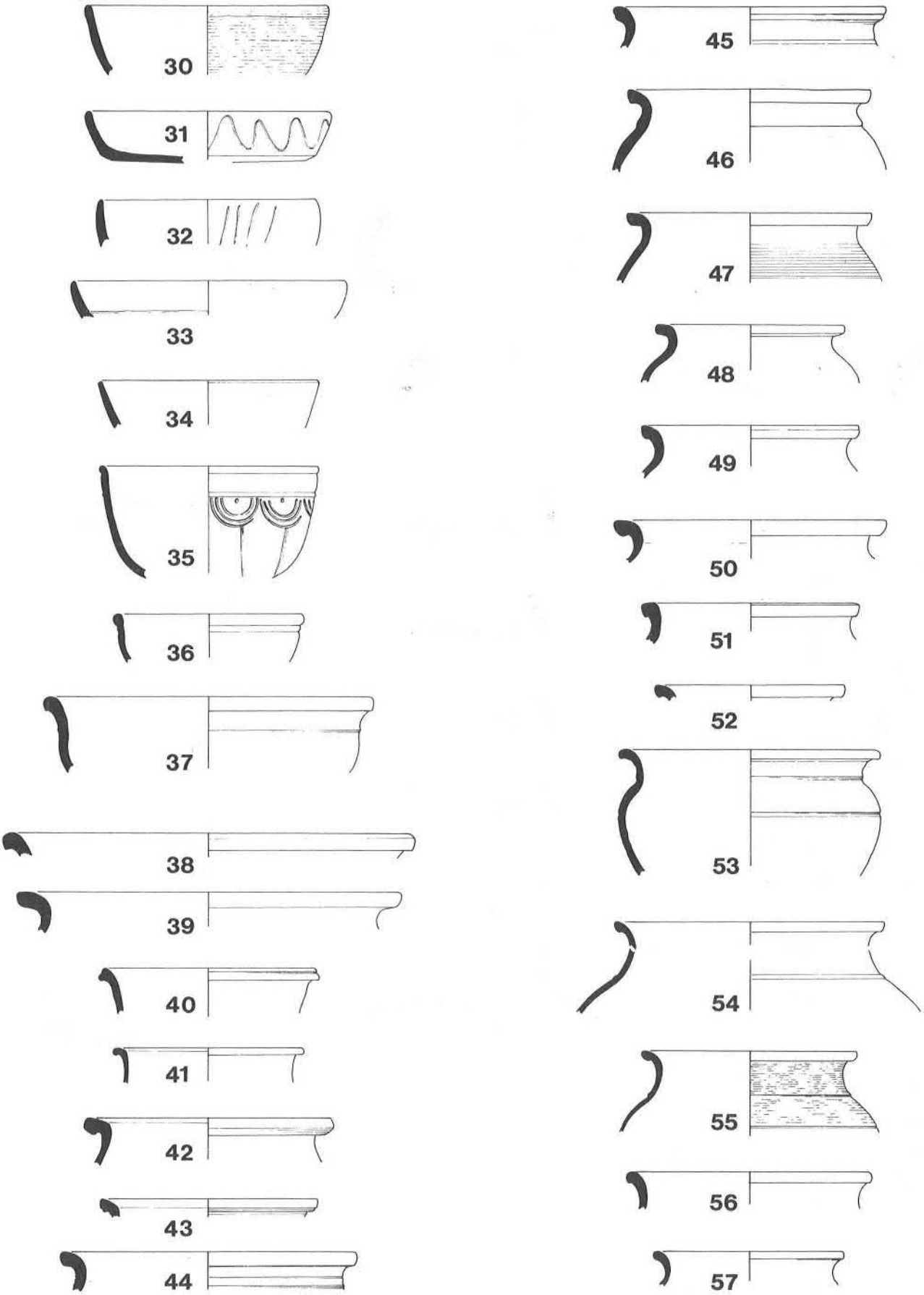

Figure 12: Pottery Group 6: mid to late second century, (Scale 1:4).

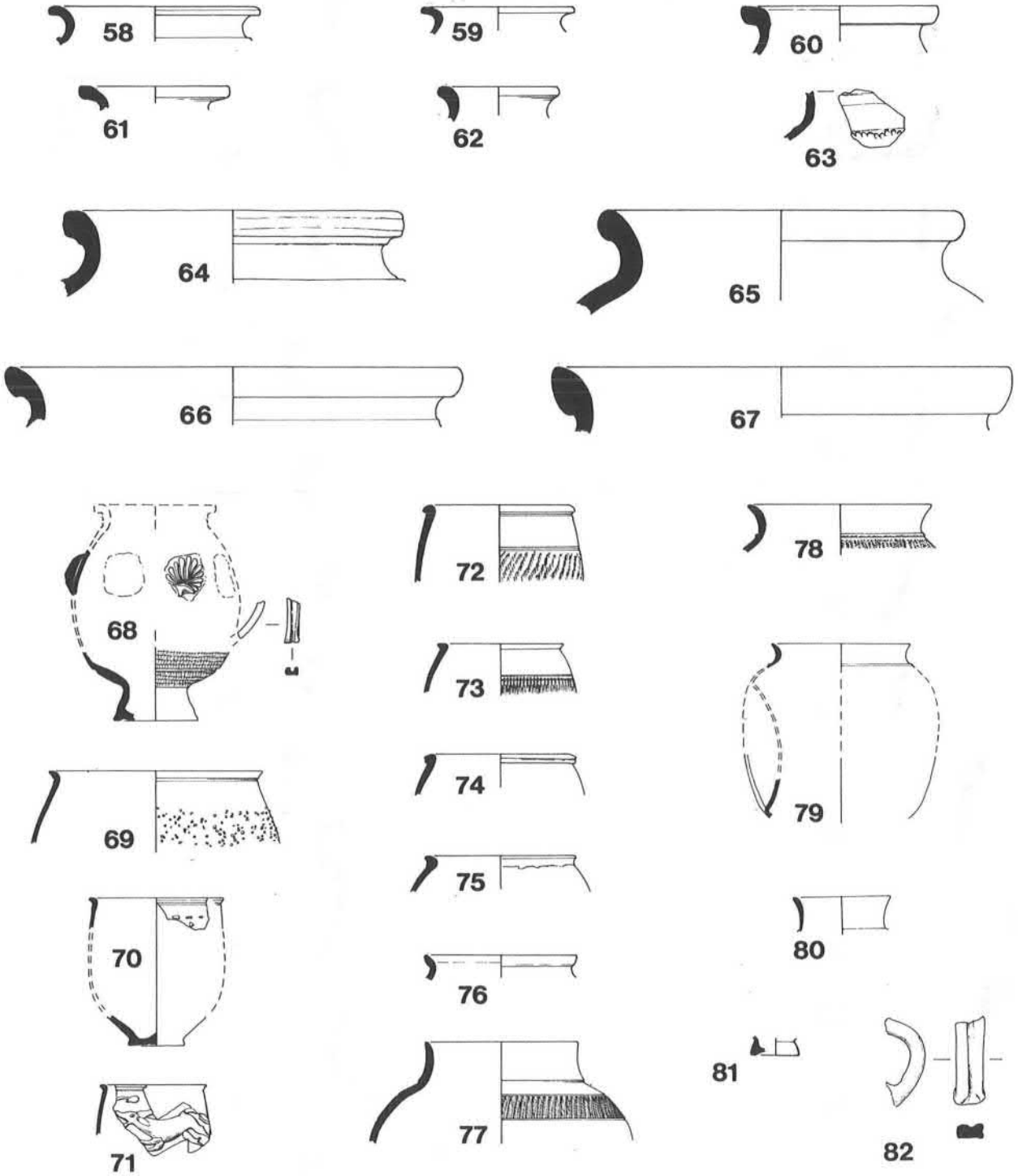

Figure 13: Pottery Group 6: nos. 58–82 mid to late second century, (Scale 1:4).

73. Fabric 17c. Light brownish-orange fabric, brighter orange core, plain rim, burnished area above rouletted decoration.
Not illustrated – part of a 17c beaker with indented sides.

74. Fabric 17a. Pale orange surfaces, darker orange core, slightly micaceous.

75. Fabric 17a. Dark pinkish-orange fabric with a thin dark-brown colour wash. Simple rim, roughly finished. A similar vessel came from a mid second-century group at Brixworth (Woods 1967, Fig 5, 25).

76. Fabric 47a. Medium grey surfaces, blue-grey core.

77. Fabric 41b. Dark pinkish-orange surfaces with a deeper orange and brownish core, exterior covered with a thin dark-brown wash. Wheel applied decoration.

78. Fabric 14b. Dark grey surfaces with a purplish hue, burnished outer face, dark grey core with a red-brown vein, rouletted decoration.

79. Fabric 34c. Mica-dusted indented beaker, pale orange surfaces, blue-grey core; one of the more common forms of the early 2nd century.

80. Fabric 14b. Medium grey burnished exterior, dark grey inner face and light grey core.

81. Fabric 18a. Minute beaker base, pink-hued white surfaces, self-coloured core.

? Flagons/jugs

82. Fabric 18a. Handle, fine sandy white ware, brownish tinge to core.
Not illustrated – Fabric 18g. Brockley Hill/ Verulamium region handle fragment.

Mortaria

All examined and dated by Kay Hartley. Not illustrated.

a) Fabric 4a? Oxford or Northants; heavily burnt. Dated 140–200 AD.
b) Fabric 4a. Oxford, probably second century
c) Fabric 4a. Oxford M14. Burnt, 180–240 AD.
d) Fabric 4a? Oxford or Northants, probably second century
e) Fabric 4a. Oxford, Burnt. 130/140–180 AD
f) Fabric 4a. Oxford 100–400 AD
g) Fabric 4a. Oxford 140–400 AD
h) Probably Northants or possibly the Verulamium region. Second century. Fabric 4g or 4eg

Samian

See report by H Pengelly, page 151 and Fig 52, 14–18.

GROUP 7 MK313 SAXON STREET Fig. 14

This site (RMK, 46) was approximately 800 metres north west of the extensive late Iron Age and Roman settlement at Woughton. Its main feature was an irregular area of stone cobbles, contained in and partially overlain by a matrix of dark grey clay. From this clay 195 sherds, largely of late second century date, were recovered. Beneath the cobbled surface was a layer of clay covering a series of amorphous pits, ditches and post-holes (only one of these was excavated and it produced 48 sherds of predominantly early to mid second-century pottery with a single sherd of colour-coated Nene Valley ware and some pieces of early Fabric 2). As the neighbouring farming settlement would have required barns and byres within the fields these features may have been part of one such structure.

The abandonment of the site towards the end of the second century must have been abrupt for the group is largely free from contamination. It is not however a sealed group. It contains a rim and a flange of an Oxford mortarium Type M18, an example of which was dated to the late second – early third centuries at Bath (Cunliffe 1969) although a date of 240–300 AD is preferred (Young 1977, 76).

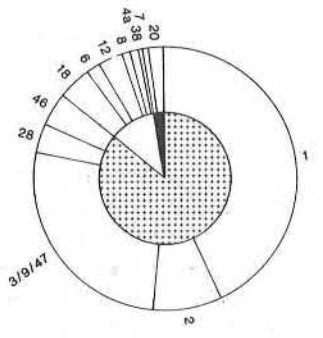

Fabric	%	*Fabric*	%
1.	43.03	6.	1.54
2.	8.72	12.	3.08
3/9/47.	26.66	8.	1.02
28.	3.59	4a.	1.02
46.	4.10	38.	0.51
18.	4.10	7.	1.02
		20.	1.54

PIE CHART 7: Percentages of Fabrics in Group 7.

The date given for the group is based on the fact that it predates both the collapse of the shelly-ware industry and the extraordinary rise of Fabric 2 sometime within the late second to early third centuries. The virtual absence of the common second-century lid-seated cooking pot pushes the date towards the last decades of that century and suggests

fairly rapid deposition (ie if the deposition had extended into the earlier period a greater number of lid-seated jars might be expected). The samian sherds from the group were Antonine and late Antonine in date.

The group contained the rims of twenty-eight vessels (including possible lids); distinctive body sherds from other vessels take this up to a likely total of thirty-six. Shell-tempered wares still dominate the percentages and are composed of nine wide-mouthed necked jars/bowls, one bowl and one totally evolved cooking-pot (with neither lid-shelf nor skeuomorphic groove). Wide, flattened out-turned rims are common on the necked vessels in this fabric.

Dishes and bowls are more numerous than jars in the grey/black sandy wares, with five of the former and four of the latter. The walls of the dishes and bowls are straighter and the rims more triangular than on many in the earlier assemblages. Other local wares include a wide-mouthed jar/bowl and triangular-headed dish in soft grey Fabric 28/25, and there are also pieces in the later Fabric 46 subgroups (possibly residual) plus some body sherds in the emerging Fabric 2.

This group lacks flagons, storage jars and narrow-necked jars or flasks. There is, however, a body sherd of a large black-coated Dr. 33 cup (a rim from the same vessel was found in the topsoil) and part of a Nene Valley 'Castorbox' lid. There are possibly three beakers, represented entirely by bodysherds, and all are non-local. Two of the body sherds come from differently coloured Nene Valley beakers whilst the third is an indented sherd of a 'Rhenish' beaker (with a plain sherd in the same fabric probably from the same vessel). Within Milton Keynes, Central Gaulish 'Rhenish' wares appear most frequently in late second to early third century contexts (see Group 9 from Wymbush MK211).

Other non-local material includes the rim of a dish or bowl in Lower Nene Valley greyware, an Oxford mortarium rim, two sherds of Dorset BB1, various white wares and a sherd in Fabric 38 from unknown sources. The shelly ware may be from Bedfordshire.

CATALOGUE: Fig 14, 1–22

Evolved lid-seated jar

1. Fabric 1a. Orange-brown surfaces, dark grey core. Slight blackening on the outer face.

Dishes/Bowls

2. Fabric 1a. Rim lightly reeded; dark brown surfaces, dark grey core. Diameter arbitrary.

3. Fabric 3k. Pale yellowish-brown surfaces, brownish-grey core.

4. Fabric 3k. Light yellowish-grey surfaces, medium grey core.
   Not illustrated – one similar in Fabric 12.

5. Fabric 28/25. Light blue/grey surfaces and core, traces of a darker grey slip or slurry.

6. Fabric 9a. Black surfaces, grey core. The scored line may be part of arc decoration.

7,8. Fabric 9a. Reddish-brown surfaces with a black wash or thin slip, dark grey core.

Wide-mouthed necked jars or bowls

9. Fabric 1a. Brownish-buff surfaces with an orange hue on the outer face; dark grey core.

10. Fabric 1a. Orange-brown surfaces, blackened outer face, grey core.

11. Fabric 1a. Brownish-buff surfaces, lightly blackened outer face, grey core.
    Not illustrated – one similar and one of the same form but smaller.

12. Fabric 1a. Reddish-brown inner face, heavy blackening on the upper rim and exterior, sooted.
    Not illustrated – one similar in Fabric 3c.

13. Fabric 47a. Brownish-grey surfaces, blue-grey core.

14. Fabric 47j. Pale orange surfaces, thin grey core.
    Not illustrated – one similar in Fabric 9a.

15. Fabric 28/25. Very light grey surfaces and core.

16. Fabric 1a. Brownish-buff inner face, blackened exterior, grey core.

17. Fabric 1a. Buff surfaces, light grey core.
    Not illustrated – one similar

Lids

18. Fabric 46k (residual) Dark brown surfaces, pinkish underskin, grey core. Diameter arbitrary.

19. Fabric 9a. Black surfaces, dark grey core. Possibly doubled as a bowl.

20. Fabric 6. 'Castorbox' lid, rouletted. Faint traces of a red-brown colour-coat.

Mortaria

Not illustrated – Fabric 4a. Rim and flange of an Oxford whiteware mortarium, Type M18, an example of which was dated to the late second to early third centuries at Bath (Cunliffe 1969) although a date of 240–300 AD is preferred (Young 1977, 76).

Samian

See report by H. Pengelly, page 156.

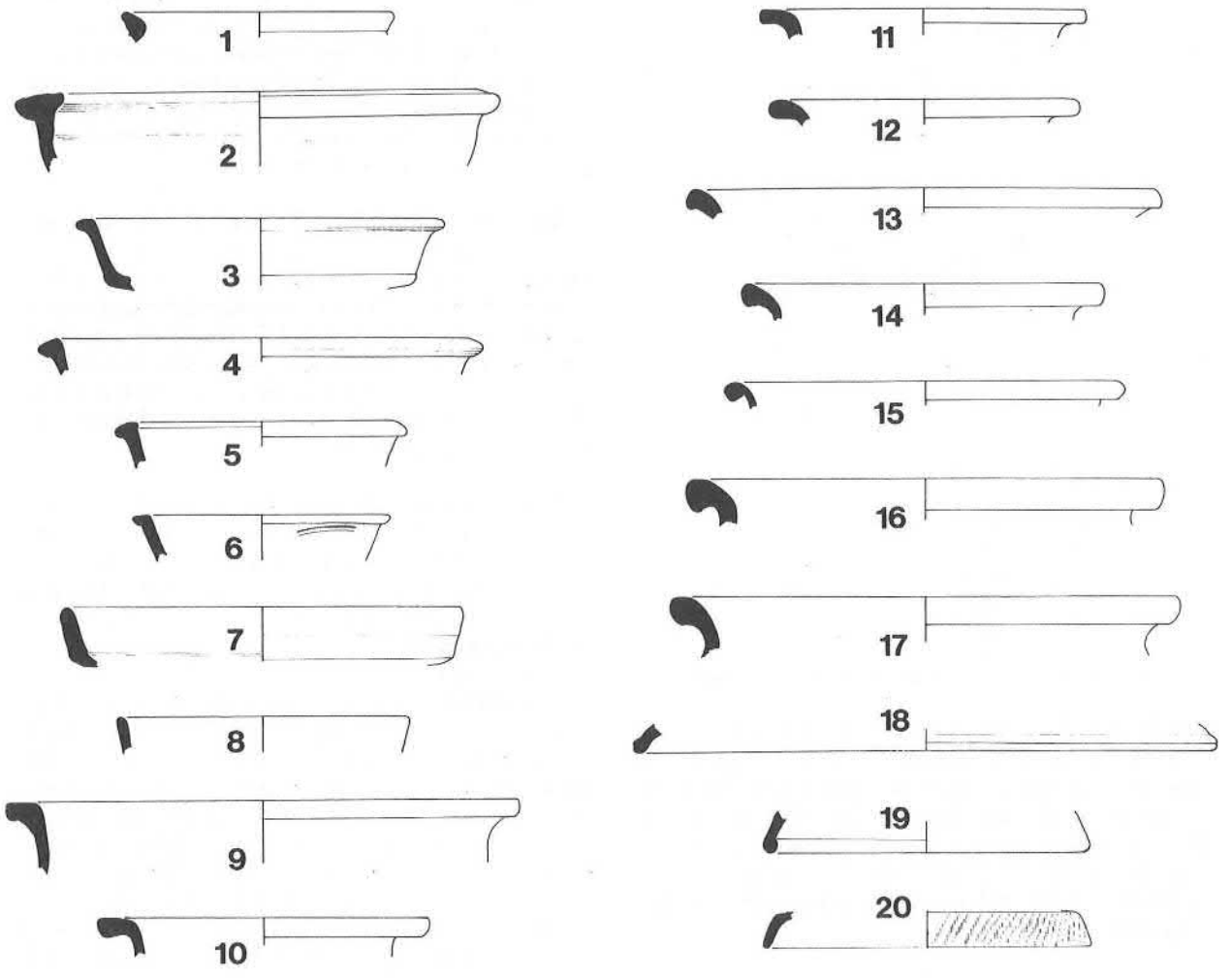

Figure 14: Pottery Group 7: late second century, (Scale 1:4).

GROUP 8 MK297 WOUGHTON Fig. 15

This is a group of 93 sherds retrieved from the beam-slot of Building 6, a rectangular timber-framed structure at Woughton (RMK, 96, Fig. 30). The feature was excavated under rescue conditions and layers within it were not differentiated.

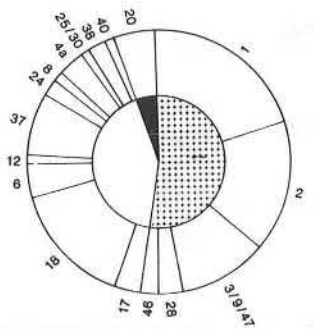

Fabric	%	*Fabric*	%
1.	20.43	37.	7.53
2.	16.13	24.	2.15
3/9/47	10.75	8.	1.075
28.	3.22	4a.	3.22
46.	2.15	25/30.	1.075
17a.	3.22	38.	2.15
18.	15.05	40.	1.075
6.	4.30	20.	5.38
12.	1.075		

PIE CHART 8: Percentages of Fabrics in Group 8.

The majority of the pottery dates to the very late second century, although there are earlier elements (marked * in the illustrations) which possibly date to the construction of the building. A timber beam laid directly in the soil would have decayed fairly rapidly and the suggested date is believed to correspond with the collapse and/or demolition of the structure.

Despite these earlier elements the percentages of the various fabrics clearly indicate a date towards the end of the second century. Had the group been dated by form alone, the percentages would be totally at variance with other groups of the same period ie early to late second century. It was therefore important to observe the quantity of the common coarse wares, for their fluctuations are generally good date indicators. Their forms are often conservative – the wide-mouthed necked bowl in Fabric 2 for example – so that quantity is frequently the only dating method available.

Thus within this assemblage the soft pink grogged ware which dominated the market in the third century forms a fair proportion, although well short of the 30%+ level that it attained in the late second to early third centuries. It comprises six wide-mouthed necked bowls or jars and one vessel, No 21, with an unusual upright rim. The shelly ware level has fallen from the 40% average that it consistently held throughout the larger part of the second century and is represented mainly by necked jars rather than the more usual second century lid-seated cooking pot. The rim of one of the latter, No 1, is typical of the evolved late form. Two others, for example No 2, are earlier in style and may date to the construction period of the structure; vessels of similar form are found in Group 4, dated late first to mid second (cf. Fig 9, 7). The necked jars or bowls are four in number; it is interesting to note the lack of heavy blackening and sooting on these vessels, features previously so prevalent on vessels in this fabric.

The grey and black sand-tempered wares are not as well represented as the other coarse wares although they equal eight vessels – a dog-dish, a triangular-rimmed bowl, six wide-mouthed jars or necked bowls – and a small fragment of a possible lid. The form of two of the jars/bowls, Nos 17 and 18, suggests that they belong to the earlier phase. The grey Fabric 28 also supplied a dog-dish rim and the base of a jar or bowl.

The group is well endowed with white wares, although only one rim was found in a fairly coarse fabric, probably from Northants or the Verulamium region. The group also produced the wall sherds of a fairly fine whiteware carinated vessel, probably a bowl.

The dominant vessel form within the assemblage is the jar or necked bowl – fifteen to seventeen out of approximately forty vessels. The same form dominated in the previous group, although in the group before that, Group 6, dated mid to late second century, dishes and bowls were the most common form. The latter within this group are eleven in number including four in samian ware. Beakers are poorly represented, there being a cornice-rimmed Nene Valley colour-coated rim sherd (larger and heavier in style than those in Group 6) a body sherd with underslip barbotine decoration, probably from the same vessel, and a fine white-ware beaker sherd with orange barbotine dots. There are two cups – a samian Dr. 33 and a copy in Fab 38, two storage jar rims, two Oxford white-ware mortaria (one of these being an M11, dated 180–240 AD) and body sherds from a red-bodied cream-slipped flagon.

Continental wares comprise 5.38% of the group and are confined to five Central Gaulish samian vessels, Hadrianic-Antonine or Antonine in date. The identifiable non-local wares came from Oxfordshire, the Lower Nene Valley, Northamptonshire or the Upper/Middle Nene Valley, the Verulamium region, Dorset and, for the shell-tempered wares, possibly Bedfordshire, though

this source has yet to be proved.

CATALOGUE: Fig 15, 1–30
Earlier pieces are marked *.

Lid-seated jars

1. Fabric 1a. Pale pinkish-buff surfaces, grey core, slight blackening on the outer upper rim. Form highly evolved.

2.* Fabric 1a. Dark orange exterior, blackened inner face, grey core.
Not illustrated – one similar.

Bowls/Dishes

3. Fabric 17b. Pale orange surfaces, darker orange margins, grey core. Burnished, hard and sandy.

4. Fabric 3a. Light grey surfaces, smoothed on the outer face, medium grey core.

5. Fabric 12. White core with grey surfaces, probably a Lower Nene Valley greyware. Second and third centuries (Howe *et al* 1980, Fig 2, 20).

6. Fabric 9a. Smoothed black surfaces, red margins, grey core.

7. Fabric 28a. Light grey throughout with smoothed surfaces.

8.* Fabric 38. Pinkish-buff surfaces, dark grey core, remains of a thick cream slip. cf. Frere 1972, Fig 119, 700, dated 130–150 AD.

Wide-mouthed necked jars/bowls

9, 10. Fabric 1a. Buff surfaces, brownish-buff core, slightly blackened upper rim.

11. Fabric 1a. Brown surfaces, blackened outer face, dark grey core.

12. Fabric 1a. Brown surfaces and core, lightly blackened on the outer face.

13. Fabric 3a/9a. Medium grey outer face, black interior, light grey core with reddish-brown margins.

14. Fabric 3k/9f. Light brownish-grey surfaces, light blue grey core with reddish-brown margins, faint traces of a thin black slip.

15. Fabric 9a. Black surfaces with black and red core.

16. Fabric 3a/9a. Light pinkish-grey surfaces covered with a thin black slip, light grey core with brownish-pink margins.

17.* Fabric 3k/9f. Light brownish-grey surfaces, blue-grey core, traces of a thin black slip.

18.* Fabric 47a. Smoothed medium grey surfaces, light grey core.

19. Fabric 2a. Pale brownish-pink throughout; contains a quantity of hard angular brown ironstone grits.

20, 21. Fabric 2a. Dark brownish-pink surfaces, fairly hard for this fabric, dark grey core.

22. Fabric 2a. Pale pink surfaces, dark purplish-grey core. An untrimmed layer of clay has been folded back under the rim to form the overhang.

23, 24. Fabric 2a. Pale pink surfaces, pale blue-grey core.

25. Fabric 2a. Orange-pink surfaces, dark grey core.

Narrow-necked jar

26.* Fabric 18c. Greyish-white outer face and core, pinkish-white interior, grooved blackened upper rim.

Storage jar

27.* Fabric 46c. Worn black surfaces, reddish-brown core.

28.* Fabric 46a. Orange-brown upper rim, with a grey core, elsewhere overfired to a deep reddish-orange throughout.

Cup

29. Fabric 38. Pinkish-orange surfaces, light grey core.

Beakers

30. Fabric 6. Orange-buff fabric with a matt black colour-coat; a body sherd probably from the same vessel has underslip barbotine decoration.

*Fabric 18a. Not illustrated, body sherd of a fine-ware beaker decorated with panels of orange barbotine dots (apparently identical to a vessel found in Ditch F10 at Caldecotte, Fig 43, 12).

Also not illustrated are sherds from an indented beaker in Fabric 6; it has a slightly lustrous colour-coat and is decorated with simple rouletting. Such features suggest a fourth century date (Howe *et al* 1980, Fig 5, 51) and may therefore be contamination. Two small orange Oxford sherds (Fabric 24) are also intrusive.

Flagon?

*Fabric 37. Not illustrated, body sherds of a red-bodied cream-slipped handled vessel, probably a flagon. The fabric is suggestive of the Hadham area in Hertfordshire and may be of a type typical of the period c. 130–160 AD (Partridge 1981, 249, Fabric D).

Mortaria

Fabric 4a. Not illustrated. Rim of an Oxford whiteware M11 dated 180–240 AD and the incomplete rim of a possible M3 dated 140–200 AD (Young 1977).

Samian

See report by H. Pengelly, page 152.

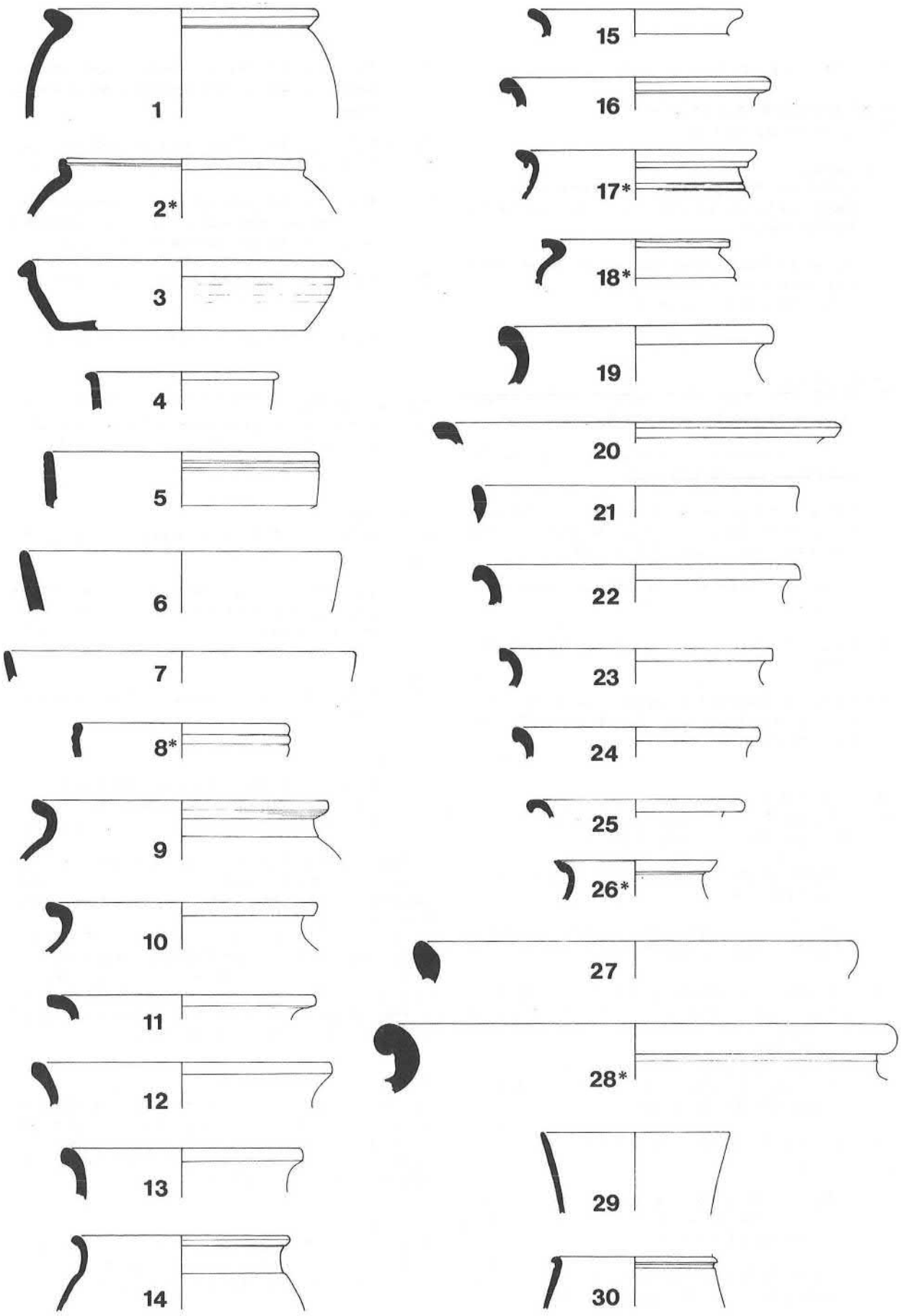

Figure 15: Pottery Group 8: ? very late second century, earlier pieces are marked with an asterisk, (Scale 1:4).

GROUP 9 MK211 WYMBUSH Fig. 16.

The material within this group came from a safely sealed context (MK211/84) stratified beneath a layer of cobble stones within Building 2; it dates to the late second to early third century (RMK, 87, Fig. 27. Re-examination of the pottery has shown the date given in RMK to be in error). The group consists of 126 sherds and suggests the presence of at least twenty-one vessels, many represented by body sherds alone, with eleven vessels represented by rim sherds.

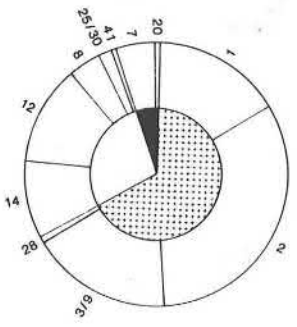

Fabric	%	*Fabric*	%
		12.	12.70
1.	15.9	8.	3.97
2.	32.54	25/30.	1.58
3/9.	16.66	41.	0.79
28.	0.79	7.	4.76
14.	9.52	20.	0.79

PIE CHART 9: Percentages of Fabrics in Group 9.

The date was indicated by a number of vessels, with emphasis on the BB1 grooved-rim bowl and the 'rhenish' wares. The various coarse-ware percentages also suggest a date after the decline of the shell-tempered wares (sometime in the late second century) and during the phenomenal rise of the soft pink grogged fabric (late second to early third).

The group does not contain a single shelly lid-seated cooking-pot although the neckless vessel, No 1, in a grey sand-tempered ware may be an attempt to copy the evolved form. There are three shell-tempered jars or necked bowls and it is this vessel form that dominates the group, there being a possible nine in total.

Bowls and dishes equal four or five in number (including one samian vessel) depending on how vessel No 1 is categorized. There is one storage jar, three beakers and one bottle or flagon.

The dominant fabric is soft pink grogged ware, equalling 32.54%. Although only three vessels are represented by rim sherds, body sherds indicate that there may have been seven vessels. The second dominant fabric is the grey-and-black sand-tempered ware, with a possible four vessels suggested by two rims and a number of distinctive bodysherds. Shell-tempered ware, which had dominated all of the groups from the late first to early second centuries onwards, has fallen to third place within this group, with three vessels represented by rims (owing to the similarity of much of this material it is not possible to recognize individual vessels from the body sherds).

This group contains a number of outstanding features, namely the quantity of Nene Valley/ Northamptonshire greywares (Fab 12 and 14) and the Central Gaulish 'rhenish', for even though the late second and early third centuries within this area appear to have been the optimum time for these fabrics their levels within this group are remarkably high. The very small amount of samian found is equally surprising.

The non-local wares (excluding the shelly material) equal roughly a third of the group, 32.53%; this figure includes 0.79% in Central Gaulish samian and 4.76% in 'rhenish' ware. Although the proportion of non-local wares is high they appear to come largely from only three places, the Upper Nene Valley or Northamptonshire, the Lower Nene Valley and Dorset. The fine orange flagon or bottle rim is very similar to the micaceous oxidized Oxford fabric and may possibly be from a related area. The group did not produce any mortaria.

CATALOGUE: Fig 16, 1–14

1. Fabric 3a. Yellowish-grey surfaces, blue-grey core.

Dishes/bowls

2. Fabric 9f. Smooth black surfaces, brownish-red margins, light grey core.

3. Fabric 8. BB1 grooved rimmed bowl of a type that appeared very shortly before 200 AD (Gillam 1976, 68).

4. Fabric 14a. Fine hard blue-grey throughout, lines of smoothing on the inner surface, groove at junction between wall and base, slight chamfer.

Necked bowls

5. Fabric 2a. Pale pink surfaces, blue-grey core.

6. Fabric 2b. Pinkish-buff surfaces, light grey core.

Necked bowls or jars

7. Fabric 1a. Light brownish surfaces, dark grey core.

8,9. Fabric 1a. Orange-brown inner face, black exterior and core.

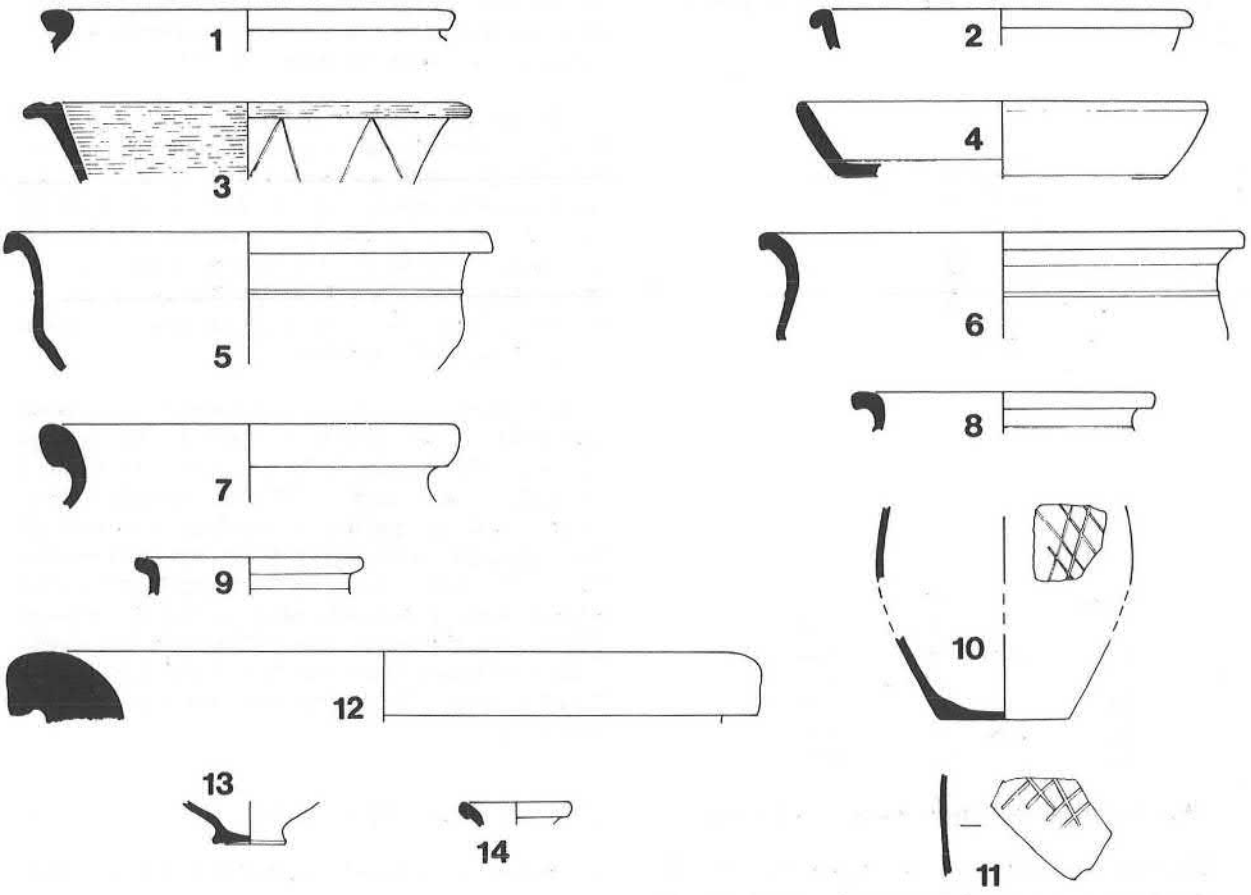

Figure 16: Pottery Group 9: late second to early third century, (Scale 1:4).

10. Fabric 8. Base of a BB1 cooking-pot and a body sherd assumed to be from the same vessel; the latter is decorated with acute latticing, cf. Gillam 1970, Fig 15, 129/130 and Fig 16, 141, dated 140–180 AD and 160–230 respectively.

11. Fabric 14a. Body sherds of a jar, fine hard blue-grey throughout, burnished lattice decoration.

Not illustrated, Fabric 14a. Body sherds of a jar, fine hard, silver grey surfaces, deep reddish-orange core, burnished lattice decoration.

Not illustrated, Fabric 12. Body sherds from a jar, white cored, grey surfaces.

Storage jar

12. Fabric 2c. Pale pink surfaces, blue-grey core; contains numerous soft white inclusions that do not react with acid.

Beakers

13. Fabric 7. Base of a 'rhenish' ware beaker, probably from one of the Central Gaulish workshops such as Vichy or Toulon-sur-Allier, mid to late second century AD (R. Symonds, pers. comm). cf. Greene 1978a, Fig 2.3, No 4

Not illustrated Fabric 7 – four body sherds of an indented rouletted beaker cf. Greene 1978a Fig 2.3, No 6, or Gillam 1970, Fig 6, 44, dated 190–240 AD.

Not illustrated Fabric 7 – one body sherd with underslip barbotine decoration cf. Greene 1978a Fig 2.3, No 9 or Gillam 1970 Fig 7, No 48, dated 200–250 AD.

? Bottle or Flagon

14. Fabric 38. Pale orange surfaces, deeper orange core, micaceous.

Not illustrated – Fabric 12. Three bases probably Lower Nene Valley grey wares, white cored with grey surfaces (one of these may be part of the jar listed above).

Samian

See report by H. Pengelly, page 150.

GROUP 10, MK269 WILLEN Fig. 17

The ditch which produced this group, dated late second to possibly the mid third century, was dug during the excavation of a 14th century moated site (RMK, 22). It is emphasised that this is not a sealed group; it had been lightly contaminated by Saxon (Fabric 10) material in the upper fill of the ditch and contained residual pottery. However, despite such drawbacks the group is included out of necessity as it is, of yet, the only group of this date (however tentative) to be recovered in this area. The same is true of each of the following third-century groups, for pottery of a third-century date or with third-century elements, as in this assemblage, is rarely found. It is hoped that future excavations will produce better stratified and sealed groups which will either verify or negate the percentages quoted here. Those vessels that are believed to be residual or contamination are marked * in the illustrations.

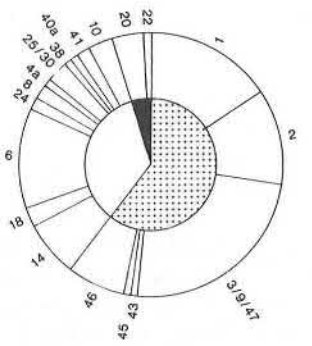

Fabric	%	*Fabric*	%	*Fabric*	%
1.	15.83	14/33.	6.66	25/30.	2.50
2.	11.66	18.	2.50	38.	0.83
3/9/47.	24.14	6.	12.50	40a.	0.83
43.	0.83	24.	1.66	41.	1.66
45.	0.83	8.	1.66	20.	4.16
46.	6.66	4a.	0.83	22.	0.83
				10.	3.33

PIE CHART 10: Percentages of Fabrics in Group

The group, which consists of 120 sherds, is dated by the presence of late Antonine to early third-century samian (one stamped piece gave a date of 160–200 AD) and a large portion of a Nene Valley colour-coated beaker, No 22 (cf. Gillam 1970, Fig 9, 79 and 80 dated 220–260 AD). The upright plain-rimmed BB1 dish, No 11, with overlapping inverted chevron decoration is probably early third century in date (cf. Gillam 1976, Fig 5, a combination of vessels 73 and 79). The level of the coarse wares also suggests this date, with the exception of the soft pink grogged ware whose percentage level is extremely low for the third century. Such a level (11.66%) suggests that the main period of deposition for the group was in the late second century, before the phenomenal rise of Fabric 2, but this is contradicted by the high level of the sandy grey-black wares which is indicative of the early to mid third century.

The group produced rims from twenty-six different vessels; of these six are believed to be residual and one intrusive. The addition of distinctive body sherds brings the total to a possible forty vessels and raises the number of residual pots to nine. The two Oxford colour-coated sherds may be contamination, in which instance the number of intrusive vessels is raised to two, but it is also possible, albeit unlikely, that they are extremely early examples of the ware.

The dominant vessel form is the bowl and dish; there are twelve including five samian bowls. The earliest samian vessel and two in coarseware may be residual.

The second most common form is the wide mouthed jar or necked bowl, of which there are eight; three in shelly ware, four in sand-tempered ware and one in soft, pink grogged ware, of which only the base remains. Two of the sand-tempered vessels were too fragmentary to illustrate. One narrow-necked jar No 21 occurred in Fabric 9e/14, a black sand-tempered ware and has been smoothed and burnished, presumably imitating BB1. A body sherd in Fabric 9g/12 has lightly incised acute lattice decoration No 20 (the illustration is mounted at an incorrect angle). Another necked vessel No 16 occurred in a sandy, grogged/clay pelleted fabric (46k) and is residual.

Also residual are two early lid-seated cooking pots and an Iron-age derived vessel with a slashed rim in Fabric 46a, Nos 1–3. The remaining cooking-pot rim No 4 is large and fairly evolved and need not be residual.

Storage jars occurred in three fabrics, with rims, in shell-tempered ware (Fabric 1) and later grogged ware (Fabric 46g, residual) and body sherds in Fabric 2.

The group contained an exceptionally high level of Nene Valley colour-coated ware, largely composed of one early to mid third century plain-rimmed barbotined beaker, No 22, plus small rim fragments from another beaker, No 23. Two other beakers were represented, one by a base in a fairly fine sandy fabric 14, No 25, and the remainder by an extremely fine sandy greyware rim (Fabric 25/30) from a small globular vessel of a type more common in the first century and first half of the second, No 24.

Unlike the previous assemblage this group did produce a sherd of a mortarium – an Oxford whiteware body sherd, not useful for dating. Another sherd of interest came from a globular Dressel 20 amphora (Fabric 22), a vessel used to import olive-oil or fish sauce from Spain to Britain during the Roman period.

In total the quantity of continental wares within the assemblage is 4.99%, composed of the Spanish amphora sherd and five samian vessels, four from Central Gaul and one from eastern Gaul. Non-local wares (including the continental and excluding the shelly ware percentages) equal just under a third of the group (32.46%) and came from the Lower Nene Valley, Northamptonshire/Upper Nene, Oxfordshire and Dorset.

The early material within the ditch (approximately mid first to mid second century) suggests activity in the area at that time. A similar pattern was found at Caldecotte (again a moated site on gravel) where the network of field systems (MK44) appears to have been abandoned in the late second to early third centuries AD.

CATALOGUE: Fig 17, 1–28

Those marked * are residual or intrusive.

1*. Fabric 46a. Brownish-orange surface blackened on the outer face, grey core; wheelmade, Iron Age derived slashed rim decoration.

Lid-seated jars

2*. Fabric 1a. Brownish-orange surfaces lightly blackened on the outer face, dark grey core; possibly handmade, finished on a wheel.

3*. Fabric 46p. Black surfaces, light-pinkish grey underskin, dark grey core, heavily chipped.

4. Fabric 1a. Buff surfaces, light grey core.

Bowls/dishes

5. Fabric 9a. Smoothed black surfaces, red underskin, dark grey core.

6. Fabric 40a. Cream coloured surfaces, light orange core, traces of a red-brown colour-coat.

7. Fabric 3g. Whitish-grey surfaces with brown iron-staining, light grey core.

8. Fabric 9f. Dark grey-black surfaces, reddish-brown underskin, light grey core.

9*. Fabric 46c. Slightly blackened purplish-brown surfaces, pale pinkish underskin, dark grey core; possibly handmade, finished on a wheel.

10. Fabric 9a. Black slipped surfaces, dark brownish core.

11. Fabric 8. BB1 Burnished black surfaces, brownish-pink underskin, black core. Upright rim and sagging base. Probably early third century. (c.f. Gillam 1976, Fig 5, 73 and 79).

Wide-mouthed jars/necked bowls

12. Fabric 1a. Light brownish-buff surfaces, darkened on the upper rim, orange underskin, light grey core.

13, 14. Fabric 1a. Brownish-buff surfaces with irregular areas of iron-staining, blackened outer rim, dark grey core.

15. Fabric 9a. Yellowish-grey with traces of a black worn surface, dark grey core.

16*. Fabric 46k. Light brownish-grey surfaces with some iron staining, medium grey core.

17. Fabric 9e/14. Black exterior, light purplish-grey interior, black core.

18. Fabric 2a. Pale pink surfaces, soft grey core. Base and body sherds only.

*Not illustrated – rims from two fragmentary sand-tempered vessels.

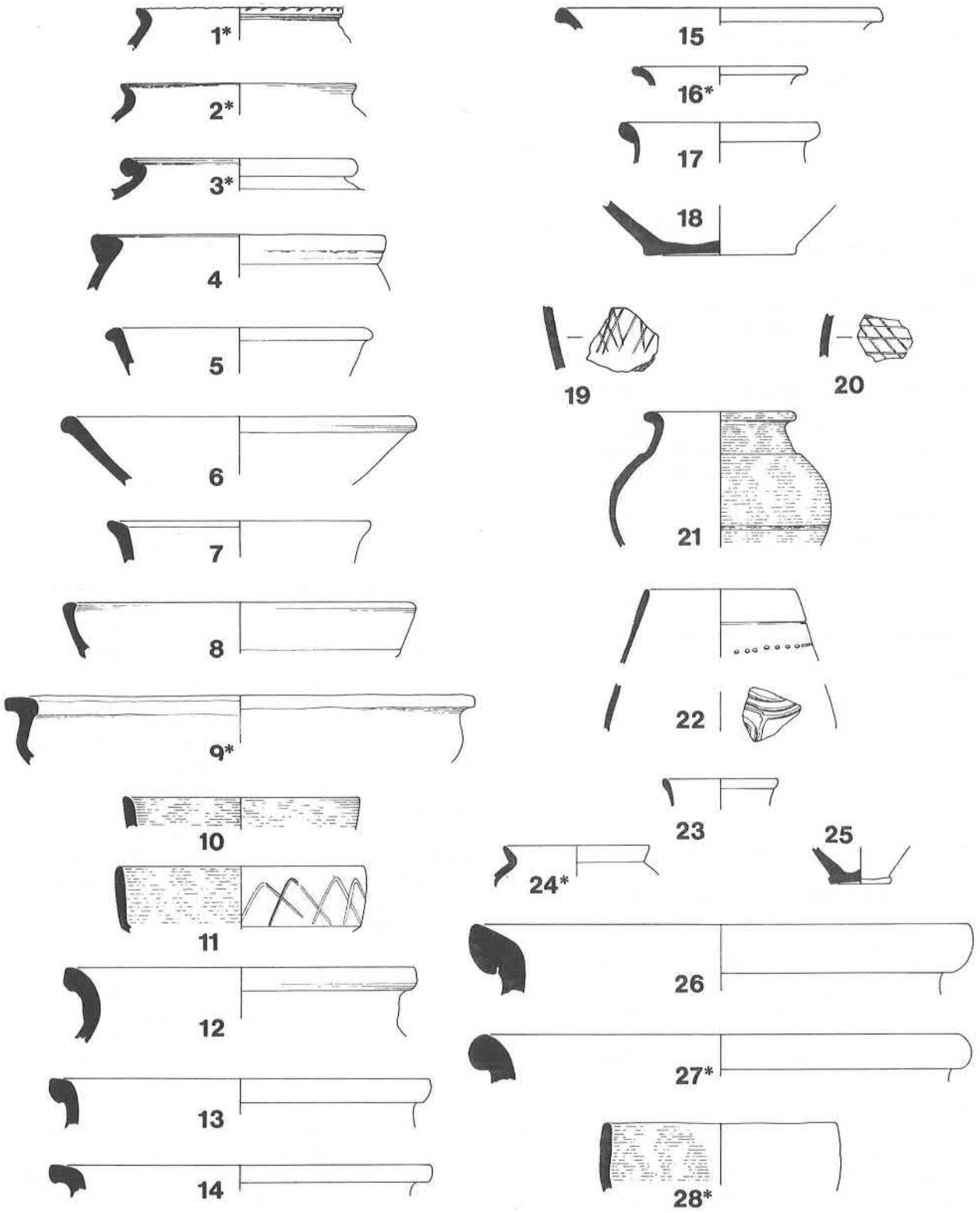

Figure 17: Pottery Group 10: late second to mid third century, residual or intrusive pieces are marked with an asterisk, (Scale 1:4)

**Decorated body sherds*

19. Fabric 14a. Light grey fabric with burnished acute lattice decoration. The clay appears to have been applied in two layers.

20. Fabric 9g/12. Black surfaces, brown core, acute lattice decoration lightly incised. (The illustration has been mounted at an incorrect angle).

Narrow-necked jar

21. Fabric 9e/14. Burnished black outer face, light grey interior. Black core.

Beakers

22. Fabric 6. White fabric, black colour-coated exterior and reddish-brown on the interior. (c.f. Gillam 1970, Fig 9, 79, dated AD 220–260).

23. Fabric 6. Pale orange fabric, black colour-coat.

24*. Fabric 25/30. Soft smooth light grey ware, blue-grey core; of a type common in the first century and first half of the second (cf. Young 1977, Fig 79, R31).

25*. Fabric 14a. Greyish-white fabric, lightly blackened on the exterior.

Storage jars

26. Fabric 1a. Light brown surfaces, dark grey core.

27*. Fabric 46g. Orange-brown surfaces, light grey core.

Saxon cooking-pot

28*. Black surfaces, burnished on the interior, sooted on the exterior, black core. Handmade.

Samian

See report by H. Pengelly, page 150.

GROUP 11 MK211 WYMBUSH Fig. 18

This group of 194 sherds came from Feature 44/52, a shallow ditch to the south of Building I (RMK, 88, and Fig 27). The percentage levels of the pottery suggest a mid to late third century-date, although the ditch may have been cut in the late second to early third century (see Discussion for Group 13, page 45). The vessel forms can be dated late third to fourth century but, for the reasons given below, a mid to late third-century date is tentatively suggested.

The dominant vessel is the flanged bowl, a form which appears to have come into use, in BB1, in the mid third century (Brodribb *et al* 1971, 58). Vessels similar to Nos 1 and 2 were found at Verulamium (Frere 1984, Fig 104, 2492) from c. AD 280, although with such decoration they are generally regarded as fourth century. At Wymbush they were found as broken but almost complete vessels that had obviously not suffered much trampling or wear; their presence in a ditch of the suggested date is possible if they are seen as recently purchased pots which had been damaged and discarded at the time of abandonment (again

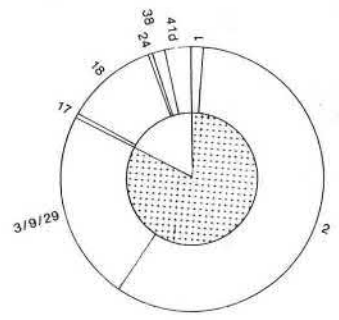

Fabric	%	*Fabric*	%
1.	1.54	18.	11.34
2.	58.25	24.	0.51
3/9/29.	23.20	38.	1.55
17.	0.51	41d.	3.09

PIE CHART 11: Percentages of Fabrics in Group 11.

about AD 280). This date also fits with the other available evidence. For example, the very low level of red and brown colour-coated Oxford ware within the group, a fabric which begun about 240 AD but flourished particularly well in the fourth century, is suggestive of a mid to late third-century date, as is the low shell-tempered ware level; at 1.54% this quantity is exceptionally small. There is also an absence of the Nene Valley colour-coated ware commonly found in late second, earlier third and fourth century contexts. The third century was, however, a time of recession, a fact which no doubt resulted in much poverty at Wymbush (and other sites) during these years.

The number of vessels within the group is low, with a total of at least sixteen pots. Out of these nine are dishes and neckless bowls, three are necked bowls or jars, one a narrow-necked jar and another a cup. The remaining two are not of recognisable form.

The small cup-like vessel, No 12, is an interesting and unusual form; it was virtually complete but very worn and may have been broken and reworked. The closest analogy is a small grey vessel at Brixworth, dated late second or first half of the third century AD (Woods 1970, Fig 12, 53).

The dominant fabric is soft pink grogged ware (Fabric 2) although it produced only two rims. In comparison the sand-tempered wares produced the rims from seven different vessels and yet was only the second dominant fabric. The percentage for the third dominant fabric (a pink 18c) is abnormally

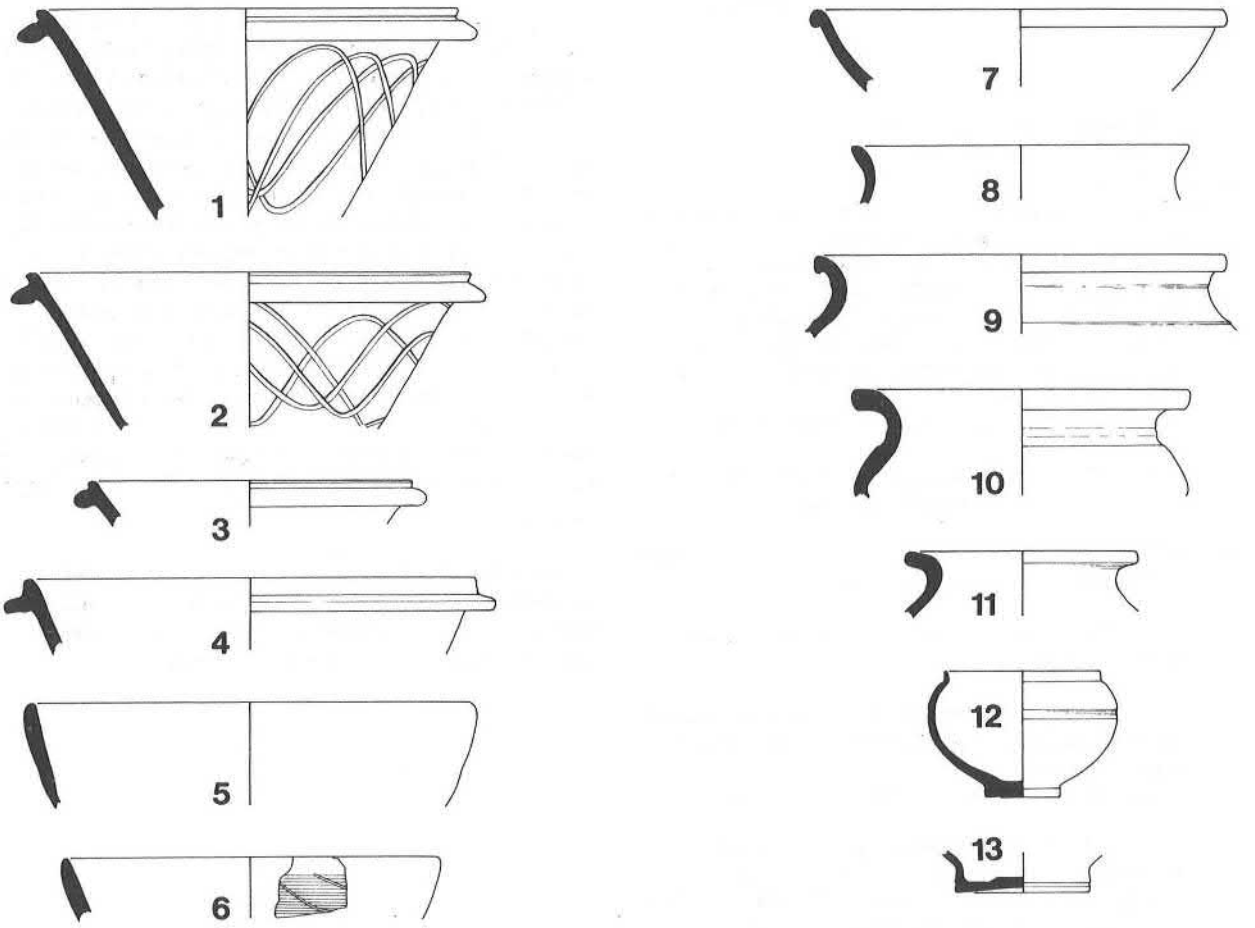

Figure 18: Pottery Group 11: ? mid to late third century, note: Vessels 1 and 2 belong to the latest phase of deposition within this feature. (Scale 1:4).

high, being composed of numerous pieces from a single vessel; this same pot, which does not appear to be local, also raises the percentage of non-local wares artificially high. A more realistic percentage is obtained by using an average of three sherds to represent the vessel; this results in a figure of 1.55% instead of 11.34%, and in the same fashion the figure for the non-local wares is also reduced to a more representative level (7.21%). The non-local wares appear to be from the Oxford region and possibly Northamptonshire and/or the Upper Nene Valley. Continental wares are not represented at all.

CATALOGUE: Fig 18, 1–13

Bowls/dishes

1, 2. Fabric 9a. Black surfaces, reddish-brown underskin, grey core; burnished overlapping arc decoration. Vessels with the same form, in BBI, came into use in the mid third century at Shakenoak I (Brodribb et al 1971, 58) whilst undecorated copies at Verulamium dated from AD 265/270. Plain and decorated versions continue on well into the fourth century (cf. Frere 1984, Fig 104, 2472–2495)
Not illustrated – one similar, rim sherd only.

3. Fabric 3a/9a. Brownish-grey surfaces, light grey core; traces of a dark-grey/black slip.

4. Fabric 1a. Light brown throughout, heavily blackened on the upper surfaces.

5. Fabric 9a. Black surfaces, reddish-brown underskin, light yellowish-grey core.

6. Fabric 19/29. Reddish-brown throughout, blackened on the inner face. Faintly rilled exterior, traces of arc decoration.
Not illustrated – one similar in Fabric 3a.

7. Fabric 24. Oxford colour-coated ware, buff-orange throughout, traces of a red-brown colour-coat (Young 1977, Type C45, dated 270–400 AD). The C.45's are always early forms to appear in this area (C. Woodfield pers. comm.).

Wide-mouthed jars or necked bowls

8. Fabric 41f. Pale orange surfaces, deeper orange core.

9. Fabric 2a. Pinkish-orange surfaces, dark grey core.

10. Fabric 2a. Pinkish-orange surfaces, medium grey core.

Narrow-necked jar

11. Fabric 1a. Heavily blackened brownish-orange surfaces, black core.

Cup

12. Fabric 18c. Pale brownish-pink throughout; of a form similar to one dated late second or first half of the third century at Brixworth, (Woods 1970, Fig 12, 53) although in a different fabric.

Base

13. Fabric 38. Buff-orange exterior, light grey inner face; from an enclosed vessel. The fabric is very similar to bowl No 7, although this base has no trace of a colour-coat.

GROUP 12 MK211 WYMBUSH Fig. 19

The 175 sherds in this group were recovered from a black organic soil deposit, 0.3–0.4 metres thick, covering the terraced area to the west of Building I at Wymbush (RMK, 87 and Fig 27). This terrace retained a build-up of hill-wash mixed with a small quantity of domestic rubbish (during the life-time of the house this area was not apparently used as a dump). The pottery, although covering the whole period of occupation of the site, is predominantly late third century in date and perhaps its presence reflects a worsening of living conditions for a decade or so prior to the abandonment of the farm (c. AD 280). Although the late third century was a time of economic growth following a recession the abandonment of Wymbush at such a time may be explained by the reorganization that appears to have ensued. Wymbush may have been farmed as a subdivision of a larger estate (Bancroft?) and its desertion due to a failure to relet once the tenancy had expired or to an excessive increase in rent (RMK 88).

As with much of the pottery from features at Wymbush none of the pieces in this group are in themselves of great interest, their value lies in providing fabric percentages for the period.

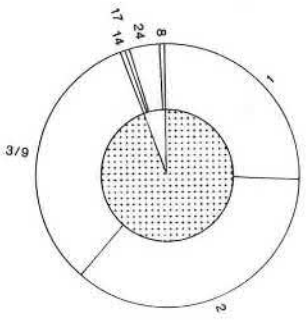

Fabric	%	*Fabric*	%
1.	25.71	17.	0.57
2.	35.43	24.	4.00
3/9/29.	33.14	8.	0.57
14.	0.57		

PIE CHART 12: Percentages of Fabrics in Group 12.

This group was dated to the late third century owing to the high level of soft, pink grogged ware (35.4%) and the low level of the Oxford colour-coated material (only 4%). The latter included a hook-rimmed C. 44, an early version of the Oxford potters' copies of a samian Dr. 31, dated 270–350 AD (Young 1977, 158). The percentages are similar to a sealed-pit group of late third century date from Cosgrove, S. Northants, i.e. 27.62% for Fabric 1, 41.59% for Fabric 2 and 3.56% for Oxford Fabric 24. The pit, W.21, contained thirty-nine coins, all closely dated to the 280's A.D. and 981 sherds of pottery (H. Quinnell, publication forthcoming).

The sherds in Group 12 appear to represent twenty-three vessels, three of which appear to date to the earlier phase. The dominant vessel form is the wide-mouthed jar or necked bowl, of which there are twelve or thirteen. Dishes and bowls are represented by three 'dogdishes', a copy of a samian Dr. 31 bowl, a deep shell-tempered bowl and possibly a pie-dish type vessel, whilst there are also three narrow-necked jars, one residual shelly lid-seated rim and a distinctive body sherd in Fabric 14. Curiously there is an absence of flanged bowls.

The dominant fabric is soft, pink grogged ware, Fabric 2, although it is represented by only three rims. One of these, No 12, has been cut to form a hook, whilst another, No 13, is rounded and thus fairly unusual for this fabric. The 25.14% level for the sand-tempered Fabrics 3 and 9 is average for this date, but the addition of the vessel in Fabric 19/29 (the same fabric as 3/9 but oxidised) takes the percentage exceptionally high (33.14%). The shell-tempered percentage, 25.71%, is a reflection of the late third-century improvement in the sales of this ware following its late second century-decline, and this is part of a pattern seen elsewhere in the region (Woods 1970, 33).

Group 12 also contains a low proportion of non-local wares (5.71%) and there are no continental pieces. The non-local wares are composed largely of red and brown colour-coated Oxfordshire material, with a single BB1 rim and two pieces from the Upper Nene (or Northamptonshire) one of which is almost certainly residual. In consideration of the fact that by between 270 and 275 AD Aurelian had managed to restore a comparatively stable administration and create a better atmosphere for trade one might expect to find a greater percentage of non-local wares in late third-century groups, but if, as the coin evidence suggests, Wymbush was abandoned by c. 280 AD, perhaps the resulting increase in trade was too late to figure strongly in the percentages of this group.

CATALOGUE: Fig 19, 1–19

Those marked * are residual.

Lid-seated cooking pot

1*. Fabric 1a. Pinkish-buff outer face, brown interior blackened over upper area.

2. Fabric 9a. Black to dark grey surfaces, brownish-pink underskin, light grey core. Burnished devolved 'arc' decoration.

3. Fabric 3a. Yellowish-grey surfaces, brownish-pink underskin, light grey core, burnished overlapping arc decoration, sagging base.

4. Fabric 8. Fairly coarse BB1; black surfaces, linear burnishing well preserved on inner face, dark grey to black core.

5. Fabric 24. Oxford. Light orange surfaces, reddish-pink core with light orange margins; red-brown colour-coat on outer face, deep orange on inner.

6. Fabric 1a. Deep bowl? Blackened exterior, light brown inner face, dark grey core.

7. Fabric 3c. Straight-sided or necked bowl? Yellowish-grey surfaces, red core, thin off-white slip.

Wide-mouthed jars and necked bowls

8. Fabric 2a. Greyish-pink surfaces, orange core.

9. Fabric 3a. Blue-grey surfaces, burnished under the rim, light blue-grey core. Not illustrated – similar rim also in Fabric 3a, but from a smaller vessel.

10. Fabric 17? Unusual fabric with similarities to Fabrics 17, 2 and 41. Slightly streaky orange-grey surfaces, dark orange core.

11. Fabric 3a. Yellowish-grey surfaces, blue-grey core, remains of a white slip.

12. Fabric 2a. Pale orange-pink surfaces, orange core.

13. Fabric 2a. Pale orange-pink throughout.

14. Fabric 1a. Black throughout.

15. Fabric 19/29. Orange-brown surfaces, blue-grey core. The base (not illustrated) has a black core and is heavily sooted on the inside.

16. Fabric 9b. Black surfaces, brownish-red core; fairly fine.

16a. Fabric 9b. Base to the above. Decorated with burnished 'doodles'.

Narrow-necked jars

17. Fabric 1a. Pinkish-buff surfaces, medium grey core.

18. Fabric 3c. Dark grey surfaces, blackened in places, red core.

19. Fabric 1a. Very light brownish-pink surfaces, heavily blackened.

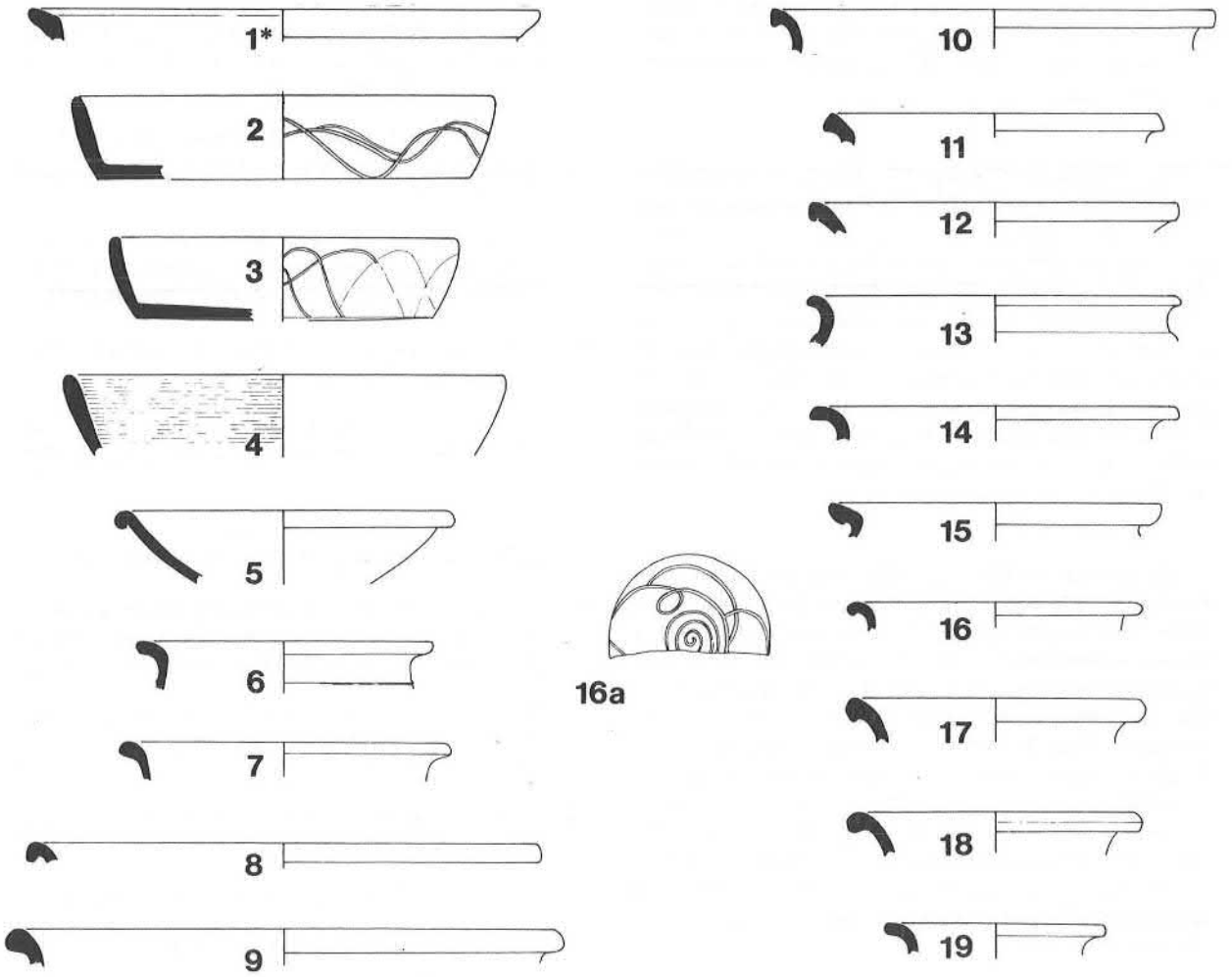

Figure 19: Pottery Group 12: late third century, note, no. 1 is residual, (Scale 1:4).

GROUP 13 MK211 WYMBUSH Fig. 20

Ditch 57–58 was found to the west of Building 2 at Wymbush (RMK, 88 and Fig 27). It was rounded and shallow, only 0.15 metres deep, and its two excavated sections produced 133 sherds of pottery. The majority of these date to c. 330–360 AD (roughly early to mid fourth century). The ditch itself however may not be of this date; it was aligned along the hillslope and may have been intended to carry surface water around the building and thus logically should date to the same constructional phase (c. late second to early third century). A small proportion of the finds do date to this earlier period. However, as the site was abandoned in the late third century (about 280 AD, a fact supported by both coin and pottery evidence) one would expect the feature to have filled largely with debris from that time, as indeed was the case with groups 11 and 12 and in the destruction rubble and topsoil. The fourth-century pottery in ditch 57–58 therefore suggests that the feature was cut by a later presence on the site, perhaps itinerants or squatters or possibly a neighbouring farmer using Building 2 as a fieldbarn.

The dating of the pottery is based on a number of factors, the most diagnostic being the Oxford ware forms and percentages (13.54%). Such a level suggests the fourth century, whilst the forms (largely the C.75 and demi-rosettes) show deposition within the feature to have taken place post-325 and post-340 AD respectively.

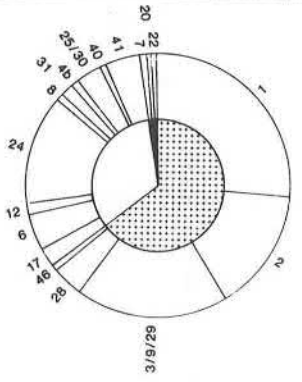

Fabric	*%*	*Fabric*	*%*
1.	26.32	8.	0.75
2.	15.04	31.	1.50
3/9/29.	18.79	4b.	0.75
28.	3.76	25/30.	3.01
46.	0.75	40.	0.75
17.	2.25	41.	4.51
6.	4.51	7.	0.75
12.	1.50	20.	0.75
24.	13.54	22.	0.75

PIE CHART 13: Percentages of Fabrics in Group 13.

The percentages for the shell-tempered ware also suggest a fourth century date. Once again it is the dominant fabric after its dramatic decline in the late second century. This recovery began in the late third century (see previous group and Brixworth, Woods 1970, 33) and flourished post 350/360 AD. However, none of the jar rims within this group are typical of the second half of the fourth century (for example the hooked, triangular rims seen in Group 14). Such a form has been noted for its late appearance (Brodribb *et al* 1971, 68). Several pieces of a heavy shell-tempered vessel were also recovered, part of a storage jar or large bowl, again typical of this fabric in the fourth century.

With the increase in the shell-tempered ware and Oxford ware came a decline of the soft, pink grogged industry. This had done remarkably well in the third century but the advent of wares presumably better for storage, cooking and the table had a detrimental effect. If, however, the soft pink grogged vessels had been marketed largely for their contents it is interesting to consider what may have occurred to effect either the production of the contents or their saleability. This slump, however, was not seen at Towcester, where percentages of 31% to 38% were recorded for the fourth century (Brown and Woodfield 1983, 79).

The group contains at least forty-two vessels (including five residual). Excluding the residual bowl, No 1, there are ten bowls and dishes, and ten wide-mouthed jars and necked bowls. The former occur largely in grey and black sand-tempered ware and the latter in shell.

Although two narrow-necked jars were recovered, one is residual. This is also true of the cups, one being an Oxford rim, the other a rim of a samian Dr.33. The beaker category also has a residual sherd of central Gaulish 'rhenish' ware; the other beakers are composed of colour-coated Nene Valley and Oxford ware. The former fabric also produced a piece of fairly coarse 'Castor box'.

Storage jars are one or two in number, depending on the vessel type of the shell-tempered sherds discussed above. The group also contains a sherd of an orange Oxford mortarium and, in fabric 40a, a handle fragment. The latter may have been copying an Oxford fashion of decorating the handles of bottles, flagons and jugs (cf. Young, 1977, Fig 54, C2/15–6).

A single body sherd of Dorset BB1 and two body sherds of possible Alice Holt/Farnham ware were also recovered, although without a diagnostic rim form for the latter it is difficult to be certain of this fabric. An adjacent ditch, 76/97 (RMK, 88 and Fig 27) produced an Alice Holt rim, dated 270–350 AD (Malcolm Lyne, pers. comm.) and these two fragments may be from the same vessel.

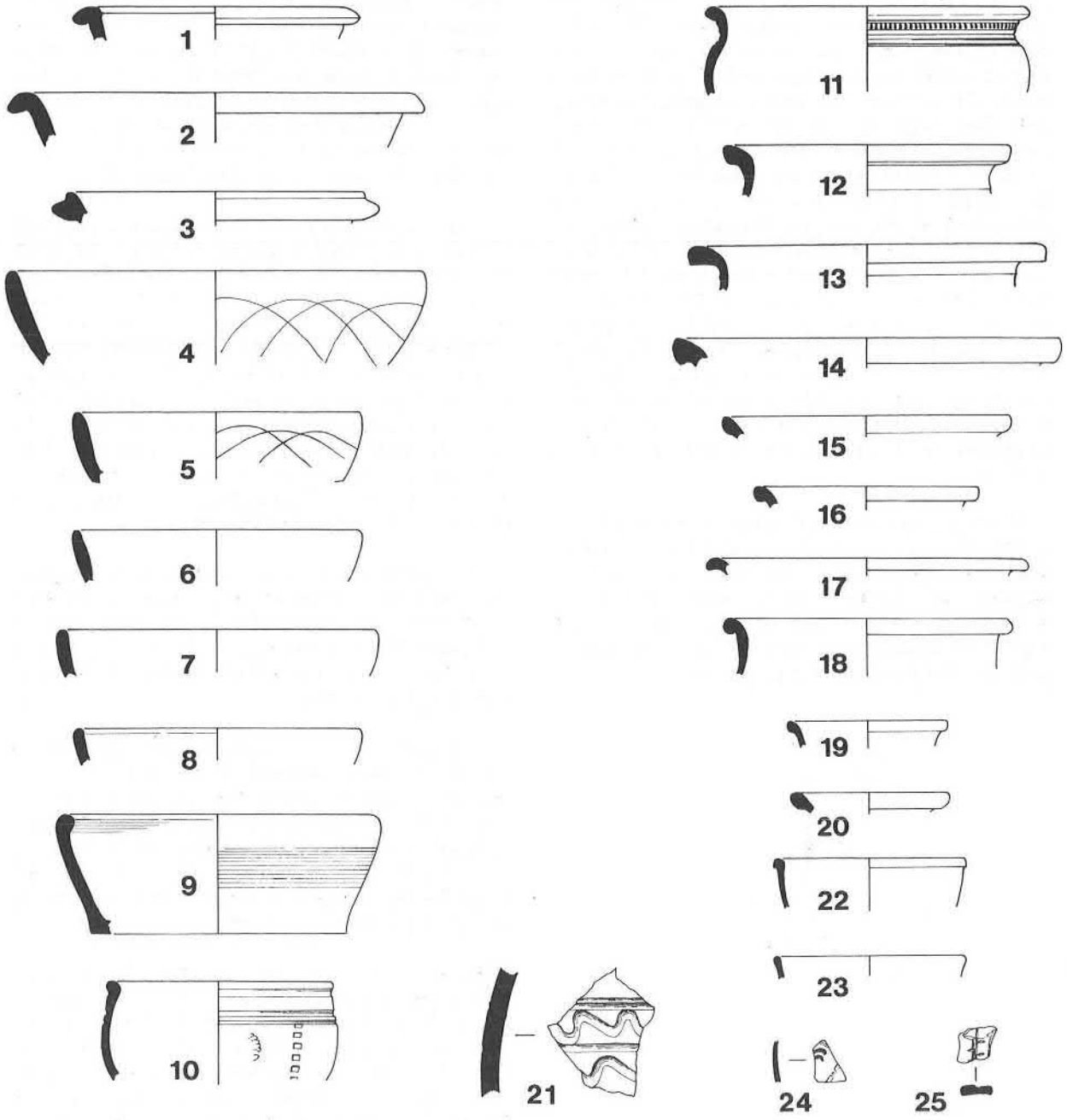

Figure 20: Pottery Group 13: early to mid fourth century (c. 330–360 AD) note, Vessels 1 and 10 are contamination or residual, (Scale 1:4).

Thus the non-local wares within this group came from Oxfordshire, the Lower Nene, the Upper Nene, Dorset and possibly Alice Holt on the Surrey/Hampshire border; these compose almost a third of the group total (29.31%). Excluded from this percentage are the residual continental wares, equalling 1.5%. All three pieces may be residual, but only two definitely are (the Central Gaulish samian and rhenish). The third, a large sherd of Spanish Dressel 20 amphora may be contemporary, as the type has a wide date-range from pre-Roman Period I levels at Camulodunum (10–43 AD) to the third/fourth centuries AD.

CATALOGUE: Fig 20, 1–25

Those marked * are residual or possible contamination.

Dishes/bowls

1*. Fabric 12/14. Very light grey core, unevenly coloured dark-grey surfaces. A comparable form was produced in the Oxfordshire kilns c 100–300 AD (Young 1977, Fig 81, R44).

2. Fabric 9a. Black surfaces, light grey core, brownish-pink underskin (c.f. Brodribb *et al* 1971, Fig 18, 42, dated 250–450 AD).

3. Fabric 3a. Medium grey surfaces, blue grey core.

4. Fabric 9a. Black surfaces, pinkish-brown underskin, light grey core.

5. Fabric 9b. Black surfaces, red core.

6. Fabric 9a. Black surfaces, pinkish-brown underskin, medium grey core.

7. Fabric 9a. Smooth black surfaces, dark grey core. Not illustrated – one similar in Fabric 3a.

8. Fabric 24. Oxford. Pinkish-orange surfaces, grey core, colour-coat totally eroded. Possibly from a C51–C54; AD 240–400+, Young 1977).

9. Fabric 1a. Pinkish-brown, irregularly blackened outer face; dark grey core. A similar vessel from Harrold, Beds. is dated c. AD 315–335 (A.E. Brown, unpublished illustrations).

10.* ?Fabric 9b. Black surfaces, brownish-red core, stamp-impressed decoration. The vessel imitates a Dr.37; in this fabric both form and decoration are extremely rare. Stamped decoration was known in Northamptonshire in the third century (Woods 1971, 39) and was used by most of the late major potteries. In Oxfordshire stamping was most common on the deeper bowl types and this vessel may be following in the same tradition. A suggestion has also been made that the vessel is in fact a very early Saxon continental import (pers.comm. T. Pearson).

Wide-mouthed necked bowls or jars

11. Fabric 24. Oxford. Bright orange surfaces, brownish-red core with a thin central grey vein in places. Traces of a red-brown colour-coat (Young 1977, C.75 dated 325–400+ AD).

12. Fabric 1a. Dark-buff surfaces, medium grey core.

13. Fabric 1a. Black throughout.

14. Fabric 1a. Buff-surfaces, dark grey core.

15, 16. Fabric 1a. Black throughout.

Not illustrated – rim fragments of two other black shell tempered wide-mouthed vessels.

17. Fabric 2c. Pale pink surfaces, light grey core; the sandiness of the fabric suggests that it may be residual.

18. Fabric 17f. Hard, pale orangey-pink surfaces, light grey core, streaky pale blue-grey wash. Rolled rim.

Narrow-necked jars

19*. Fabric 12. White core, dark grey surfaces.

20. Fabric 25/30. Dark pink core, light grey surfaces with darker grey wash.

Storage jar

21. Fabric 2d. Body sherds only, predominantly pink surfaces with large blue-grey patches, blue-grey core. Incised decoration.

Cups/beakers

22. Fabric 24. Oxford. Micaceous bright orange surfaces, dark red core, colour-coat totally eroded. Unusual form.

23. Fabric 24, as above. Beaker rim, possibly a C.20 (270–400+ AD), C22 or variant (240–400+).

24. Fabric 24 as above. Thin body sherd, probably from a beaker, decorated with a linear comb-stamp and demi-rosettes; the latter only became really common after c. 340 AD (Young 1977, 132).

Handle

25. Fabric 40a. Small, slashed handle sherd, pale pinkish-orange surfaces, orange core.

Mortaria

Not illustrated – Fabric 4b. Body sherd of an Oxford red-and-brown colour-coated mortaria. 240–400+ AD.

Samian

See report by H. Pengelly, page 150.

GROUP 14 MK211 WYMBUSH Fig. 21,

This group of 183 sherds came from a key-hole shaped depression, 42, in the yard area east of Building 1 at Wymbush (RMK, 87 and Fig 27); although the feature had a shape similar to contemporary oven/grain drier stokeholes there was

no sign of burning on the roughly stone-lined sides nor any quantities of ash within the fill. The group is unusual for its date in being uncontaminated either by earlier or intrusive material.

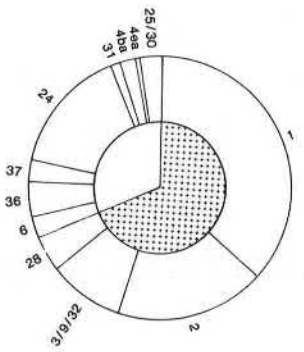

Fabric	%	*Fabric*	%
1.	36.06	37.	2.73
2.	18.58	24.	15.85
3/9/32.	9.29	31.	1.09
28.	4.37	4ba.	1.64
6.	2.73	4ea.	0.55
36.	4.37		

PIE CHART 14: Percentages of Fabrics in Group 14.

The pottery gives a date of c. 350–360/370 AD. The shell-tempered level (36.06%) strongly indicates a date after the mid fourth century revival of this ware, as do the triangular undercut rims, eg. No 5 (Brodribb *et al* 1971, 68). It may not extend much beyond this date, as the Nene Valley percentage level is low (2.73%) and the soft pink grogged percentage (18.58%) is closer to an early-mid fourth century level rather than a mid-late fourth.

At least twenty-eight vessels were represented, although the total is probably nearly thirty-five. The dominant vessel form is the wide-mouthed jar or necked bowl, equalling fourteen in number, followed by four bowls/dishes, three narrow-necked jars, two storage jars, two mortaria and, possibly, a beaker, flagon and lid.

Shell-tempered ware is the dominant fabric, predominantly black in colour, composed entirely of wide-mouthed jars or necked bowls and narrow-necked jars. Surprisingly there are no dishes in this ware; all four in the group are in the finer fabrics.

The second dominant ware is 'soft pink grogged' Fabric 2, again composed of wide-mouthed necked jars or bowls but also including several storage jar pieces. The third fabric is Oxford ware, present as bowls and a mortarium.

Local grey and black sand-tempered vessels in Fabric 3 and 9 are not well represented; there are only body sherds and part of a thick heavy black base. However, Fabric 32, a coarser version of the local sandy ware (found both oxidized and reduced) occurred as a small number of body sherds and a simple rounded everted rim similar to 9.

Non-local wares in the group equal approximately 28.96%; the figure cannot be exact because of the difficulty in recognizing plain body sherds of grey Hadham and Alice Holt material. However, the majority of this percentage are definitely from the Oxfordshire kilns, with a smaller quantity coming from the Lower Nene Valley and Northamptonshire, Hadham in Hertfordshire and Alice Holt on the Surrey/Hampshire border. There are no continental wares in the group.

CATALOGUE: Fig 21, 1–15

Bowls/dishes

1. Fabric 25/30. Soft light blue-grey surfaces and core, slightly darker grey margins. Poorly incised decoration.

2. Fabric 6. Lower Nene Valley. White fabric with orange-brown colour-coat; possibly an imitation Dr.38, dated late third – fourth century or the rim of a 'Castor box' (Howe *et al* 1980, Fig 7, 83 and 89).
   Not illustrated – Fabric 24. Oxford, orange surfaces, grey core, eroded colour-coat; a rim fragment as above, probably a C51 or variant, 240–400+ AD (Young 1977, Fig 59).

3. Fabric 24. Oxford. Brownish-buff surfaces, orange core, red-brown colour-coat; some discolouration through burning. A C.58, dated 300–400+ AD (Young 1977, Fig 61).

Wide-mouthed jars and necked bowls.

4. Fabric 24. Oxford. Fine brownish-orange surfaces, reddish-orange core, red-brown colour-coat. A C.75, dated 325–400+ AD (Young 1977, Fig 62).

5. Fabric 1a. Black surfaces and core. Hooked or triangular undercut rim, typical of the mid fourth to early fifth century (Brodribb *et al* 1971, 68).

6. Fabric 1a. Black exterior and core, brownish-buff interior. Comments as above.

7. Fabric 1a. Pale pinkish-grey surfaces, dark grey core.

8. Fabric 1a. Black throughout.
   Not illustrated – one similar but smaller.
9. Fabric 36? Possibly Hadham ware; light grey surfaces and core with brownish tinge.
   Not illustrated – three rim fragments similar in form to the above; one in light brownish-orange Fabric 32a, two in pinkish-brown Fabric 1a.

10. Fabric 2a. Buff surfaces, light grey core.

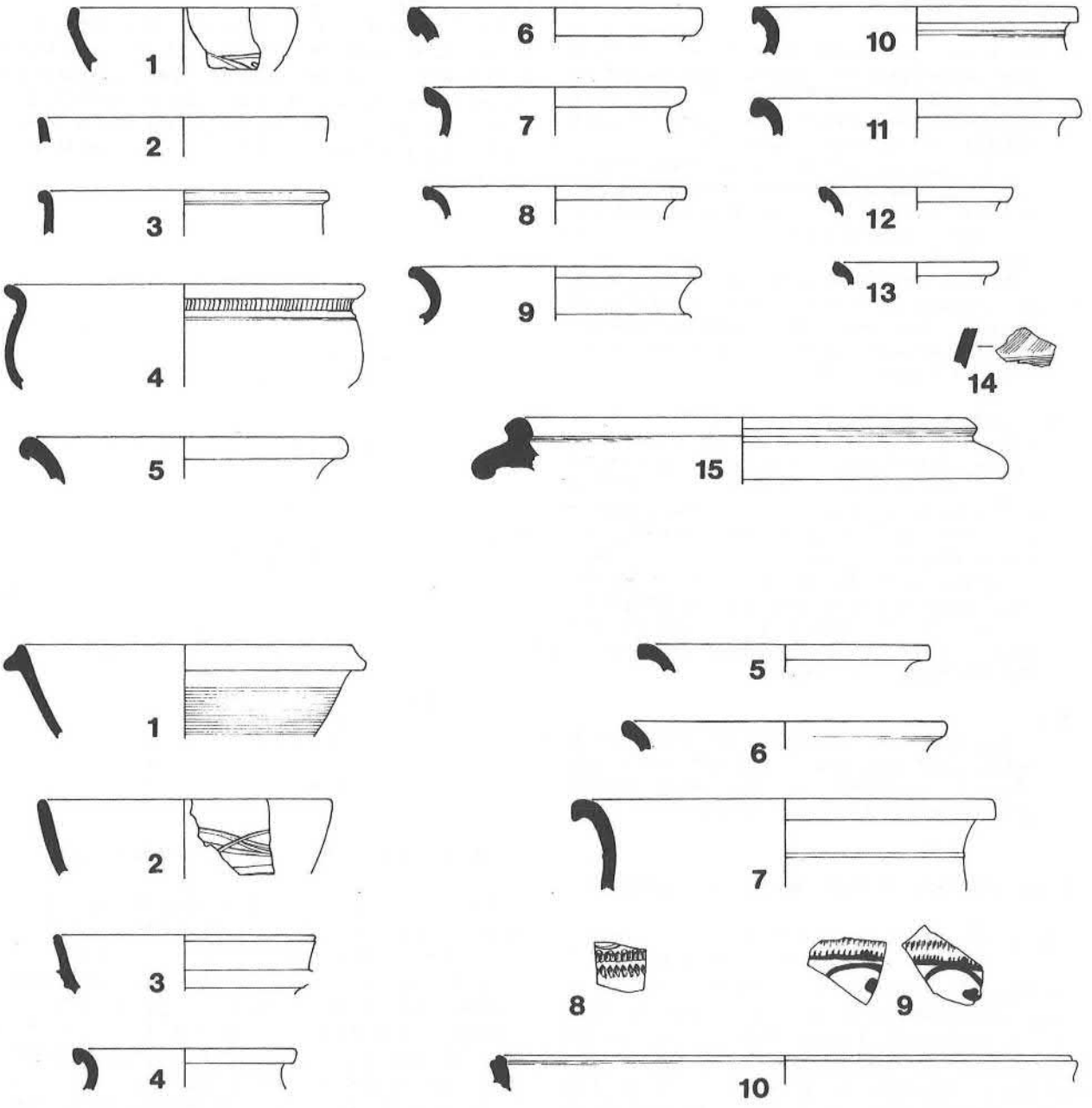

Figure 21: Pottery Group 14: mid fourth century, nos. 1–15 and Group 15: mid to late fourth century, nos. 1–10, (Scale 1:4).

11. Fabric 2a. Pinkish-buff surfaces, light grey core.
    Not illustrated – two similar, one also in Fabric 2a. the other in a grey Fabric 28a.

Narrow-necked jars

12. Fabric 1a. Black throughout; hooked mid fourth – early fifth century form.

13. Fabric 1a. Black throughout.
    Not illustrated – one similar but slightly larger.

Decorated body sherds

14. Fabric 31a. Alice Holt/Farnham ware; body sherd only. Whitish-grey core, medium grey slipped exterior, comb decorated. May be part of the storage jar found elsewhere on the site, Type 4.42 dated 270–350 AD (Lyne and Jefferies 1979, 45).
    Not illustrated – Fabric 6. Lower Nene Valley. Single thin body sherd, buff core with grey central vein, lustrous black colour-coat, decorated with simple rouletting.From a beaker ? c.f. Howe *et al* 1980, Fig 5, 55–57.
    Not illustrated – Fabric 24. Oxford. Body sherd, light-grey core, reddish-orange margins, light orange surfaces (colour-coat totally eroded). Stamped with demi-rosettes, a form of decoration common after c. 340 AD (Young 1977, 132).

Mortaria (by Kay Hartley)

15. Fabric 4ea. Northants. Slightly sandy, pinky-orange surface streaked with a watery grey wash, pink and drab greyish cream core. Very fine quartz and red-brown tempering; very few translucent trituration grits survive on the single fragment. 240–400+ AD probably fourth century.
    Not illustrated – Fabric 4ba. Oxford. A fine textured, slightly micaceous orange-brown fabric with a grey core, no slip surviving but likely to be cream or white. 240–400+ AD. Form generally similar to WC4.1 (Young 1977, Fig 38).

Lid

Not illustrated – Fabric 6. Lower Nene Valley. Single sherd from the area of the 'steam'-hole. White with a reddish-brown to brown colour-coat. Fourth century (Howe *et al* 1980, Fig 72–73).

GROUP 15 MK105 BANCROFT VILLA Fig. 21.

This group from Ditch G at Bancroft Villa (RMK, 65 and Fig 19) consists of an extremely small sample of forty-six sherds. Despite this, the pottery in general conforms to the pattern seen elsewhere for the mid to late fourth century and is of extra relevance as the date is supported by the recovery of three coins from the lowest level of the ditch which cuts into the mortar floor of the underlying second-century stokeroom, Room 3. These coins cover the date range 330–348 AD. Ditch G may have been a drainage ditch for the western bathsuite of the later house built after the destruction of the earlier villa to which Room 3 belonged.

It may be that the pottery and coins date the cutting of the drainage ditch and therefore, logically, the construction of the western bathsuite. If constructed in the mid fourth century it would be part of the fourth-century refurbishment (the majority of the mosaics are dated c. 350 AD). However, one would expect a drainage ditch to be kept relatively clear while in use (these forty-six sherds came from only two small sections) therefore perhaps these pieces belong to a period long after the construction and cutting, to a time when removing the debris ceased to be important, either during the last uncertain years of 'romanised' (as opposed to Saxon) habitation or to the post-abandonment period when discarded pottery, lying uppermost over the area, was washed into the open ditch. It may be of course that the suggested mid to late fourth century date embraces all three of these circumstances.

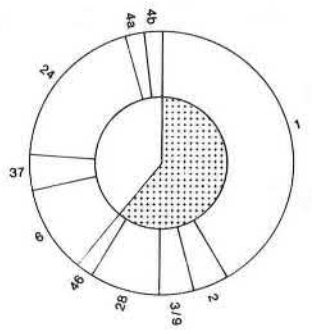

Fabric	%	*Fabric*	%
1.	41.30	6.	10.86
2.	4.34	37.	4.34
3/9.	4.34	24.	19.56
28.	8.69	4a.	2.17
46.	2.17	4b.	2.17

PIE CHART 15: Percentages of Fabrics in Group 15.

As the sample is very small the group contains a number of abnormalities, the most obvious of these being the extremely low percentages for the soft pink grogged ware and the local grey and black sandies. The latter may be partly explained by the presence of another greyware, Fabric 28, although when discussing the finds at MK64, Wood Corner, Mrs Charmian Woodfield thought the production of the grey/black wares to be minimal in the last half of the fourth century.

The level of the shell-tempered ware is high (41.3%) and definitely indicates a post-350 date, as does the black triangular hooked rim in this fabric (Fig 21, 4). The high level of the Oxford ware also suggests such a late date, but unfortunately the

forms present have a wide date range, of 240–400+ AD. This excludes the mortarium fragment which may be part of an M23, dated 350–400+ AD.

Nene Valley colour-coated ware is fairly well represented and includes some interesting pieces. The lustrous, metallic finish is typical of the fourth century (Howe *et al* 1980, 9) and the style of decoration found on a number of sherds resembles that of a possible mid to late fourth century Nene Valley flagon (*op.cit.* Fig 6, 68) although these pieces are decorated *en barbotine* rather than painted, a fact clearly seen both across the break where the clay of the barbotine stands strongly in relief and in the heavy scroll terminals which are unlikely to have been the result of brushwork.

The number of vessels in the group is at least fourteen. The dominant form is represented by four wide-mouthed jars or necked bowls, with three bowls or dishes, two mortaria and two possible flagons; the other forms are indeterminate.

The dominant fabric is shell-tempered ware which occurs as wide-mouthed jars or necked bowls and as a rilled flanged bowl (a similar vessel was recovered from the fourth century kiln 5 at Harrold, Beds. Info. A.E. Brown). Red and brown colour-coated Oxford ware is the second dominant fabric, represented by bowls and possibly a flagon, followed by Lower Nene Valley colour-coated ware also from a flagon or similar large vessel.

A very high proportion of the group is non-local, 39.1% composed of material from Oxfordshire, the Lower Nene Valley and Hadham in Hertfordshire. It did not contain any continental pieces.

CATALOGUE: Fig 21, 1–10

Bowls/dishes

1. Fabric 1a. Lightly rilled black exterior, sooted over flange, dark grey core with reddish-brown margins, purplish-black inner face.

2. Fabric 9a. Sooted black surfaces burnished on the inside face, burnished decoration on the exterior; purplish-brown core with brownish-black margins.
   Not illustrated – base sherd also in Fabric 9a, possibly from the vessel above; both faces decorated with burnished doodles.

3. Fabric 24. Oxford. Burnt orange colour-coated fragment without flange; a C.51.1 copying a Dr.38, dated 240–400+ AD (Young 1977, Fig 59).

Wide-mouthed jars and necked bowls

4. Fabric 1a. Black throughout, slightly sooted; triangular undercut rim typical of the second half of the fourth century (Brodribb *et al* 1971, 68).

5,6. Fabric 1a. Black throughout.

7. Fabric 2. Pale pink surfaces, dark blue-grey core; the vessel appears to have been thrown using extremely wet hands in the later stages producing a thin slip or slurry which has fired a lighter creamy-pink and also given a better surface to the pot.

Decorated body sherds

8. Fabric 24. Oxford. Dark brown colour-coat over a brownish-orange exterior surface, blue-grey inner face and core; from a fairly large enclosed vessel. The sherd is decorated with large rouletted leaf-like impressions and a self-coloured barbotine scroll and dots. Possibly from a C.8 flagon, dated 240–400+ AD (Young 1977, Fig 53).

9. Fabric 6. Lower Nene Valley. Creamy-white fabric, lustrous metallic dark brown colour-coat on exterior, matt brownish-orange in interior; decorated with wide simple rouletting and creamy white over-slip thick barbotine scrolls. From a large vessel with wheel-ridged interior, possibly a flagon or jug cf. Howe *et al* 1980, Fig 6, 68 dated to the fourth century, possibly second half.
   Not illustrated – Fabric 6. Nene Valley body sherd similar to the above with a black lustrous colour-coat and thin overslip barbotine scroll decoration.

Mortaria

10. Fabric 4a. Oxford. Upper rim only, probably part of a mortarium. Cream coloured surfaces, pink core; faint traces of orange-brown paint on the exterior face. From a large vessel, 36cms in diameter; size and decoration suggest that the vessel may have been an M23, dated 350–400+(Young 1977, Fig 24).
    Not illustrated – Fabric 4b, Oxford. Bodysherd of an orange colour-coated mortarium, dated 240–400+ AD.

GROUP 16 MK354 CALDECOTTE Fig. 22

This is a small collection of sixty-nine sherds of mid to late fourth century date. They were retrieved from an unexcavated site (RMK, 50) prior to its destruction during the construction of the Caldecotte Balancing Lake in 1982. The visible soil features were concentrated over an area approximately 30 metres across, to the north of which lay an alignment of large quartzite pebbles and ironstone blocks which, it was felt, may have been the remnants of a simple sill wall.

All the pottery and finds were recovered from the surface of the site; they include three late Roman coins, two dated 337–41 AD and one 341–46 AD and another of third or fourth century date but illegible. The finds also included an interesting third-century bronze disc brooch and a small number of items not late Roman in origin, for example a possible Saxon strap tag end, a Georgian halfpenny, a Saxon pot sherd (Fabric 10) and three early Roman sherds, including a piece of samian.

The date for the group is based on pottery forms and percentages, largely from the Oxford and Nene Valley colour-coated wares; it is supported by the presence of an Alice Holt/Farnham ware rim, the orange Much Hadham and the high level of the shell-tempered ware, a post-350 occurrence (Brodribb *et al* 1971, 68).

There are approximately twenty-two vessels represented in the group (excluding the residual and intrusive material). These are composed of seven wide-mouthed jars or necked bowls, six bowls or dishes, three mortaria and a number of undetermined forms. The rosette stamp in Oxford ware is probably from a deep bowl (Young 1977, 132).

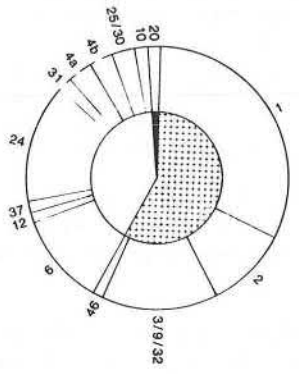

Fabric	%	*Fabric*	%
1.	31.88	24.	14.48
2.	10.14	31.	1.45
3/9/32.	14.48	4a.	2.89
46.	1.45	4b.	2.89
6.	11.59	25/30.	2.89
12.	1.45	20.	1.45
37.	1.45	10.	1.45

PIE CHART 16: Percentages of Fabrics in Group 16.

Shell-tempered ware is the dominant fabric with 31.88%. It produced five vessels – four wide-mouthed jars or necked bowls and a straight-sided dish. Oxford ware, including the mortaria, is the second largest group, composed of fineware bowls and mixing bowls; without the mortaria it produced the same percentage as the local grey and black sandy wares, which did not produce a single rim. The absence of the grey sandy Fabric 28 is interesting and may be due to the locality of the site, close to the Woburn Sand Heights, a possible place of origin for Fabric 3, 9 and 32. Nene Valley colour-coated wares were well represented, with a total of five vessels consisting of three bowls or dishes and two wide-mouthed jars.

The Alice Holt rim, no 10, is an interesting piece, being a 3B class vessel imitating contemporary BB1 and BB2 types. The type began fairly early on in the Alice Holt repertoire but the presence of the black/white burnished slip puts it later than c. 270 AD (Lyne and Jefferies 1979, 35). However, a well stratified sequence of Alice Holt vessels from Thenford in the extreme south-west of Northamptonshire suggests that most of the trading activity from Alice Holt to this region took place after 375 AD (*op.cit.* 77), although an exception to this was found at Wymbush (Fig. 48,9).

Another interesting piece is the shell-tempered body sherd with applied clay strip decoration, No 13. It is thin and well-made with faint rilling on the exterior face, attributes which appear to be Roman in origin rather than Medieval. Certainly at the Oxford kilns during the second half of the fourth century the technique of applied clay strip decoration was already known (Young 1977, 129). However, as this piece did not come from a stratified deposit some doubt must remain over its date.

Considering the fact that kilns were possibly producing pottery in the neighbourhood of this site, the percentage of non-local ware is high – 34.75%; this excludes the residual and intrusive material. There are no continental wares.

CATALOGUE: Fig 22, 1–17

Those marked * are residual.

Bowls and dishes

1. Fabric 6. Nene Valley. White with an orange-brown colour-coat. Type 79, fourth century (Howe *et al* 1980, Fig 7).

2. Fabric 24. Oxford. Burnt. Type C.51, dated 240–400+ AD (Young 1977, Fig 59).
   Not illustrated – flange from a vessel similar to the above in Fabric 6 Lower Nene Valley ware, light orange fabric with a reddish-brown colour-coat. Type 83, dated late third-fourth century (Howe *et al*, Fig 7.)

3. Fabric 1a. Blackened exterior, orange-brown interior, dark grey core.

4. Fabric 6. Nene Valley. White with a very dark brown to black colour-coat.

5. Fabric 24. Oxford. Bright orange surfaces, light grey core, traces of a red-brown colour-coat. Type C.49, dated 240–400+ AD (Young 1977, Fig 58).

Wide-mouthed jars and necked bowls

6. Fabric 1a. Black surfaces, dark grey core.

7. Fabric 1a. Black exterior and upper part of inner face, reddish brown lower inner face, dark grey core.

8. Fabric 1a. Black exterior and upper part of inner face, brownish-pink lower inner face, dark grey core.

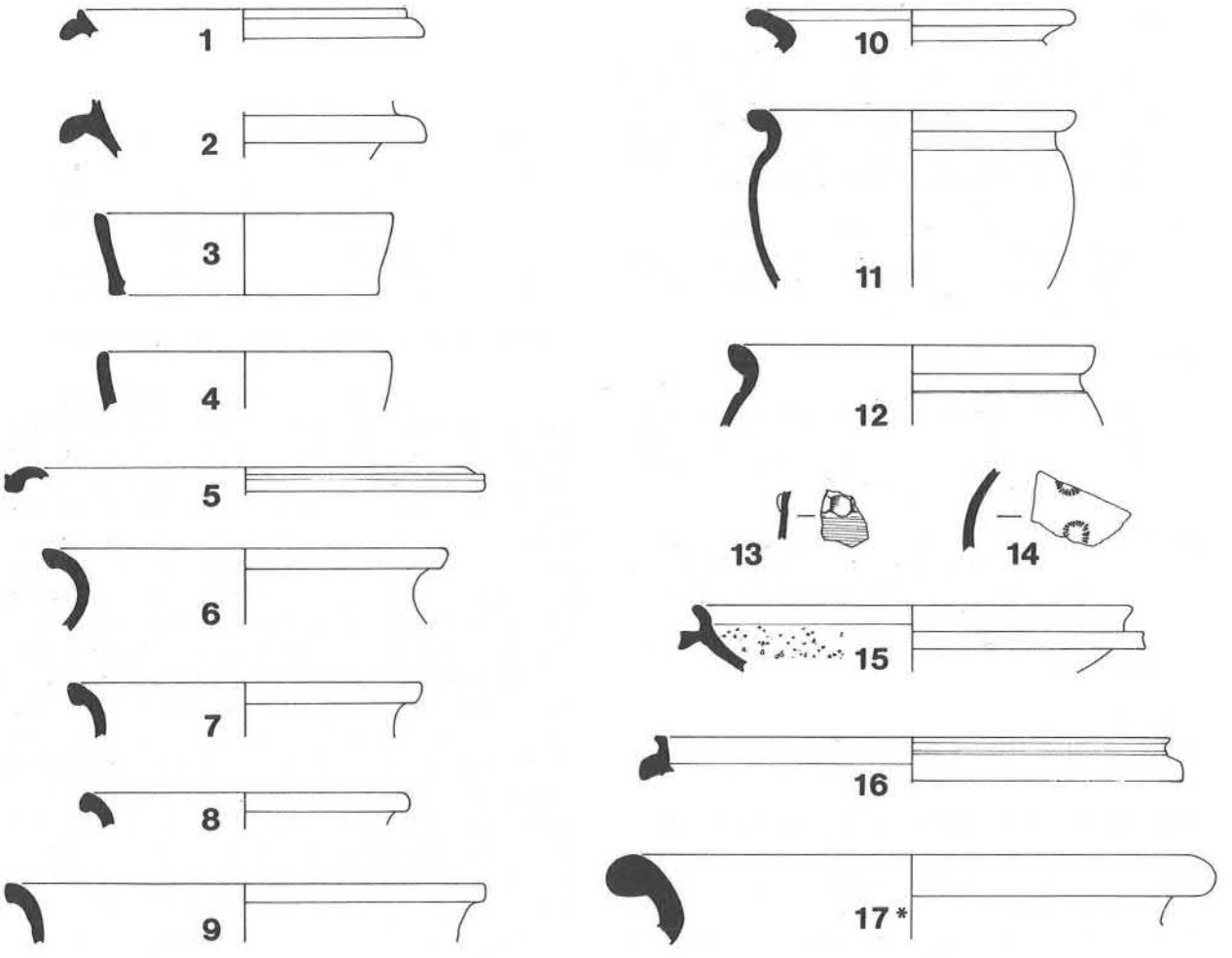

Figure 22: Pottery Group 16: mid to late fourth century, note, no. 17 is residual, (Scale 1:4).

9. Fabric 2a. Light orangey-pink surfaces, light grey core.

10. Fabric 31. Alice Holt/Farnham ware. Blue-grey fabric with partial slip, fired white over inner upper rim and slate-grey on exterior. Type Class 3B, dated 270–420 AD (Lyne and Jefferies 1979, Fig 28).

11. Fabric 6. Nene Valley. White with a brownish-orange colour-coat. Type 75–76, fourth century (Howe *et al* 1980, Fig 7).

12. Fabric 6. Nene Valley. White with a dark brown colour-coat. Type as above.

Decorated body sherds

13. Fabric 1a. Lightly rilled buff exterior, black interior. Applied clay strip on outside face, impressed with thumb or stick. Such a technique was in use at the Oxford potteries during the second half of the fourth century (Young 1977, 129) and may have been used simultaneously by the shellyware potters.

14. Fabric 24. Oxford. Orange surfaces, red core, traces of a brownish-orange colour-coat; rosette impressed decoration of a type common after the mid 4th century (Young 1977, 132).

Mortaria

15. Fabric 4b. Oxford. Light brownish-orange surfaces, darker orange to red core, red-brown colour-coat, quartz trituration grit. Type C.100, dated 300–400 AD, but became more popular as the century progressed (Young 1977, Fig 67).

16. Fabric 4a. Oxford. Burnt whiteware. Type M22, date range 240–400+ AD, but from about 300 AD it was the principal Oxford mortarium product (Young 1977, Fig 23).
    Not illustrated – incomplete rim of a second Oxford M22.

Storage jar

17*. Fabric 46a. Orange-brown surfaces, grey core.

GROUP 17 MK105 BANCROFT VILLA Fig 23

The 147 sherds in this group came from a 'feature' which was, during excavation in 1976, believed to be a grubenhaus, sealed beneath the destruction rubble of the villa building. Upon re-excavation in 1984 the 'grubenhaus' was found to be a large area of 'slump' at the intersection of two fourth-century ditches (R.J. Zeepvat, pers. comm.). The pottery from this 'slump' is composed of material dating from either the last years of the villa and/or the squatter occupation of the site. The group produced a small percentage of earlier pottery, a not unusual occurrence for late assemblages, and fourteen Saxon sherds (Fabric 10) of sixth to seventh century date.

The group has been tentatively dated to the late fourth/early fifth centuries AD. It contains rims of a 350–400+ date but none specifically diagnostic of the fifth century. This date is suggested because of

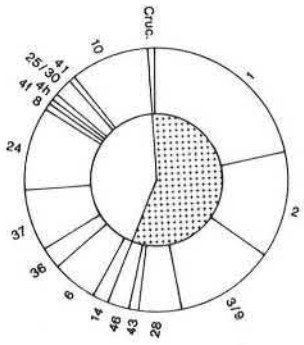

Fabric	%	*Fabric*	%	*Fabric*	%
cruc.	0.68	46.	2.72	8.	0.68
1.	22.45	14.	2.04	4f.	0.68
2.	12.92	6.	5.44	4h.	0.68
3/9.	12.24	36.	2.72	25/30.	2.04
28.	5.44	37.	7.48	41.	0.68
43.	1.36	24.	10.20	10.	9.52

PIE CHART 17: Percentages of Fabrics in Group 17.

two factors, firstly the decline in the shell-tempered ware percentage from a 30–40% level in the mid to late fourth century to the 22.45% level seen in this group. This is still a considerable quantity and it may be that the shell-tempered industry continued fairly strongly for a number of decades into the fifth. (A similar low percentage of 18.95% was produced from an area of topsoil and destruction rubble at Stantonbury MK301; this same level elsewhere on the site produced a Nene Valley 'Romano-Saxon' bossed vessel of late fourth to fifth century date (Howe *et al*, Fig 7, 74)). The second factor thought to indicate a late date is the Hadham ware, the red or orange form of which is represented in this group by 7.48%. In an assemblage dated post-364 AD from Angel Court, Walbrook in London the Hadham wares made up 5% of all the pottery found (Orton 1977) and in a group dated c.410 AD orange Hadham was noted as 'increasing' (C. Going, unpublished lecture), a fact certainly true of this ditch assemblage.

However, as a contrast to this, the Stantonbury topsoil and rubble which should, by analogy, also have contained a fair proportion of orange Hadham ware, produced but a single body sherd (0.29%). There are also a number of other contradictions between the two groups which only the eventual discovery of safely sealed late fourth or fifth-century assemblages will clarify.

Excluding the intrusive and residual material there are at least forty-two vessels within this group. These are composed of twenty wide-mouthed jars and necked bowls (the dominant

form), thirteen bowls and dishes, two narrow-mouthed jars, two flagons, two mortaria, one crucible and some pieces of undetermined form in Fabrics ?36 and 8.

The dominant fabric is shell-tempered ware with, surprisingly, Fabric 2, soft pink grogged ware, in the second greatest quantity (12 and 7 vessels respectively). The grey and black local sandies are the third dominant fabric although they produced only three individual rims; this compares poorly with both the Oxford and Nene Valley wares which produced five rims apiece yet are lower in the sherd percentages.

With the exclusion of the residual pieces the non-local wares equal 27.88% of the group; they originated from the Lower Nene Valley, Oxfordshire and Hadham in Hertfordshire. There is also a single body sherd of Dorset BB1 which may or may not be residual as vessels in this fabric are believed to have been marketed into the adjacent south Midlands after the mid fourth century (Swan 1978, 15). There are no continental products in the group.

CATALOGUE: Fig 23, 1–36
Those marked * are residual or intrusive.

Bowls/dishes

1. Fabric 3a. Light grey surfaces with traces of a thin blue-grey slip, blue-grey core, shallow rilling.

2. Fabric 25/30. Fine sandy, light grey surfaces, off-white margins, blue-grey core.

3. Fabric 9a. Black surfaces, dark grey core.

4. Fabric 1a. Black throughout, deeply rilled.

5. Fabric 1a. Black throughout, slight sooting on the inside face.
   Not illustrated – one similar with buff surfaces and a grey core.

6. Fabric 1a. Black exterior, brown inner face, dark grey core.

Some extremely large shell inclusions.

7. Fabric 6. Nene Valley. Orange-brown colour-coat, white surfaces, light pinkish-orange core.

8. Fabric 6. Nene Valley. Dark-brown colour-coat on exterior, orange over interior, pale orange fabric. Type dated late third-fourth century (Howe *et al* 1980, Fig 7, 83).

9. Fabric 24. Oxford. Brownish-orange core, dark orange colour-coat. Type C.68 dated 300–400+ AD (Young 1977, Fig 61).

10. Fabric 24. Oxford. Orange colour-coat, orange surfaces, blue-grey core. Type C.46; all dated examples are later than 340–400+ AD (Young 1977, 158).

11. Fabric 24. Oxford. Light brownish-buff fabric, traces of a dark reddish-brown colour-coat. Type C.45/46, dated 270–400+ AD (Young *op.cit*).

12. Fabric 1a. Buff inner-face, black exterior, dark grey core. The out-turned rim, upturned at the tip, suggests that it may be a poor copy of the fairly common Oxford form C.49 (itself an imitation Dr.36/ Curle 15).

Wide-mouthed jars and necked bowls

13. Fabric 1a. Dark grey interior, lightly sooted; light greyish-pink inner face, grey core.
    Not illustrated – one similar but smaller.

14. Fabric 1a. Dark grey exterior, light pinkish-brown inner face, grey core. Hooked triangular rim typical of the second half of the fourth century AD (Brodribb *et al* 1971, 68).

15. Fabric 1a. Pinkish-grey outer face, pink interior, grey core.
    Not illustrated – one similar but smaller.

16. Fabric 1a. Dark grey inner face, lightly sooted, purplish-grey exterior, grey core.

17. Fabric 2a. Orange surfaces, blue-grey core.

18. Fabric 2a. Pale brownish-pink surfaces, blue-grey core.
    Not illustrated – two similar, one of these being considerably smaller.

19. Fabric 2a. Light orange-pink surfaces, blue-grey core.
    Not illustrated – one similar

20. Fabric 28. Hard dark blue-grey fabric, lighter blue-grey core; faint traces of linear burnishing on inside face. Occasional large shell inclusions.
    Not illustrated – one similar but smaller in Fabric 3a.

21*. Fabric 14a. Blue-grey throughout, slight purplish hue to core.

22. Fabric 6. Nene Valley. White fabric, dark brown colour-coat. Related to jar types 75–76, fourth century (Howe *et al* 1980, Fig 7).

23. Fabric 6. Nene Valley. White fabric, brownish-orange colour-coat; possibly related to type 86, fourth century (Howe, *op.cit.*).

24. Fabric 24. Oxford. Uniform orange fabric, dark orange colour-coat. Small C.75, dated 325–400+ AD (Young 1977, Fig 62).

25. Fabric 2a. Light orange surfaces, brownish pink core.

26. Fabric 1a. Black throughout.
    Not illustrated – one similar but smaller in Fabric 41f.

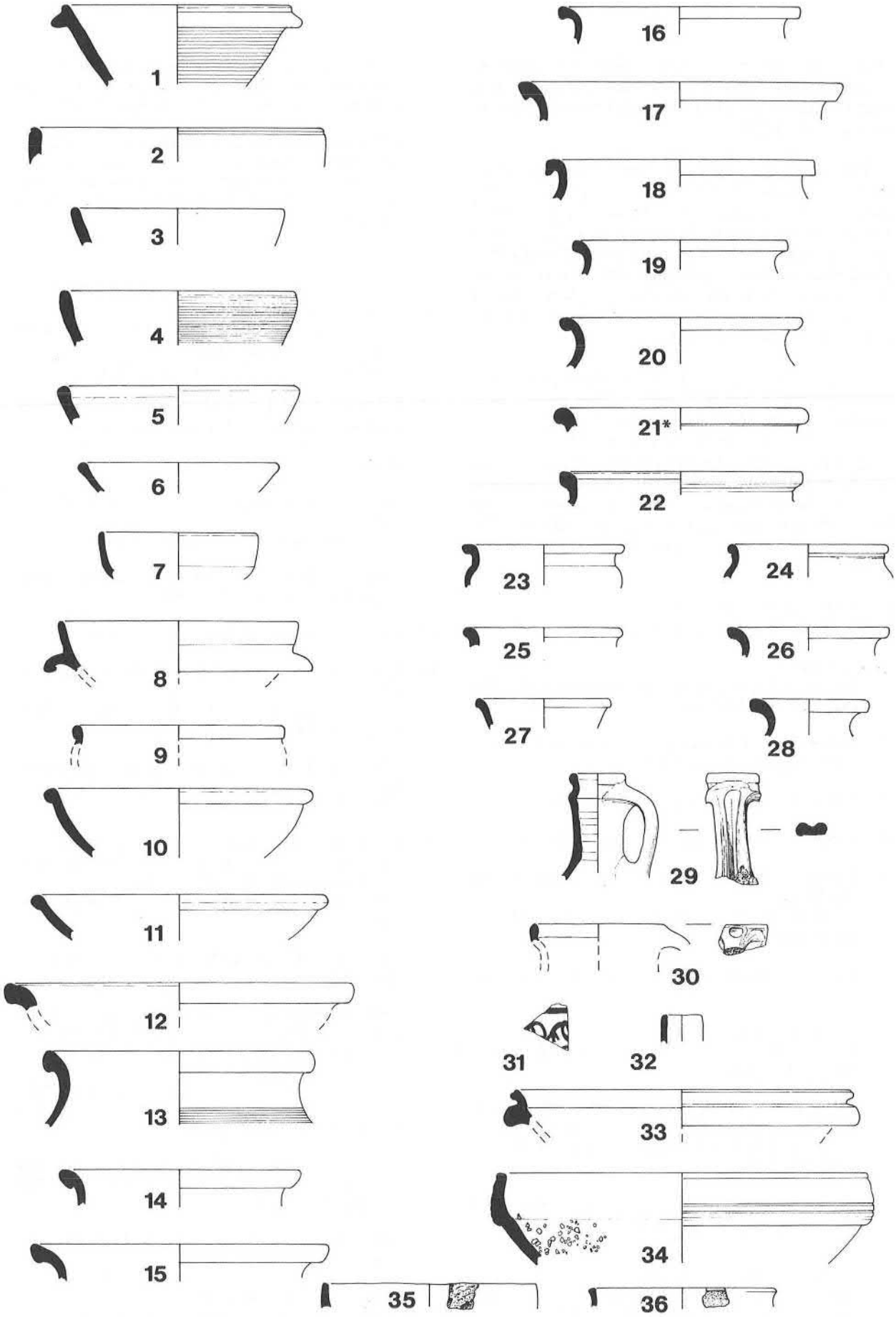

Figure 23: Pottery Group 17: ? late fourth to early fifth century, (Scale 1:4).

Narrow-necked jars

27. Fabric 24. Oxford. Brownish-orange throughout, eroded colour-coat. Possibly a C.16, dated 270–400+ AD.

28. Fabric 28. Blue-grey surfaces, lighter blue grey core.

Flagons/Jugs

29. Fabric 6. Nene Valley, white fabric, dark grey to black colour-coat. Type 66, dated mid to late fourth century (Howe *et al* 1980, Fig 6).

30. Fabric 37. Hadham, orange surfaces, originally burnished, darker orange core; 'dimple' decoration on top of handle. The form appears to be like the Oxford type C13.2 and may be of similar date – ?350–400+ AD.

Decorated body sherd

31. Fabric 2a. Smoothed greyish-pink surfaces, decorated with reddish-brown paint, blue-grey core.

Not illustrated – Fabric 24 Oxford red-brown colour-coated sherd, decorated with white paint, a practice which only became common in the second quarter of the fourth century (Young 1977, 133).

Crucible

32 Light grey throughout, roughly finished, encrusted with slag.

Mortaria

33. Fabric 4h. Hadham. Deep orange burnished surfaces, darker reddish-orange core, quartz trituration, the form is similar to an Oxford C.100 and may be of the same date – 300–400+ (the type became more popular as the century progressed (Young 1977, 174)).

34. Fabric 4f. Lower Nene Valley. Hard, off-white fabric, black ironstone trituration grit. Unusual form, fourth century.

Saxon

35*. Fabric 10. Black throughout, handmade.

36*. Fabric 10. Patchy black and red outer face, black core and interior. Handmade.

THE FABRIC TYPES

A: LOCAL WARES

i Shell Gritted Wares (Figs 24–26)

Fabrics 1a and 1b
This fabric contains much ground fossil shell of a type commonly found in local Jurassic beds. It is not certain whether the shell was added to the potting clay as temper or occurred naturally. At Bromham in Bedfordshire clay from the river banks was used which contained ground shells and grits, though it was thought that extra shell and flints were added to the larger vessels (Tilson 1973, 31). At Elstow, Beds, where clays from the Great Ouse region were employed, rounded limestone fragments are recorded occurring in the usually fine clay matrix; their roundness suggests that they had been waterborne and thus also of natural occurrence (Woodward 1977, 38). However, the uniform distribution of the shell flakes, their quantity and regular size range may be thought to indicate rigorous control of the clay temper.

The largest kiln centre near Milton Keynes known to have used fossiliferous clays was at Harrold, Beds (Brown 1972), although evidence of a single kiln producing lid-seated jars similar to the Harrold products was found at Emberton, Bucks (Mynard 1970, 62). From the second century onwards the forms produced at Harrold resemble those found locally, but in the first century AD a number of the Harrold channel-rimmed vessels had multiple lid-ledges, a peculiarity of style seen only rarely on those from this area, for example at Sherwood Drive (Fig 24, 7) and Stanton Low (Jones 1957, Fig 5, 13). The earlier Milton Keynes vessels are elongated in the rim and frequently angular (see Fig 6, nos 1–15). The use of fossiliferous clays was a native tradition and the lid-seated rim a late Iron Age form (Thompson 1982, 234). At Irchester it was found in large numbers in both pre- and post-conquest groups (Hall and Nickerson 1967, 78–90) and at Brixworth it was fairly common in the Claudio-Neronian period, c. 41–68 AD (Woods 1970, 33).

In this area at approximately the same date the normal quantity of Fabric 1 is difficult to determine. This largely stems from the problem of assigning sites to this date range with any degree of confidence. For instance 88 sherds from a pit at Sherwood Drive (MK100 Pit 1) which produced 15.91% in shelly ware looks essentially early to mid first century and yet contained a sherd of Flavian samian. At Walton in Group I, dated to about the mid first century, the shelly ware equals a mere 1.77% of the 226 sherds, whilst at Cotton Valley, Group 2, dated mid to late first century AD, produced 34.7% out of 475 sherds.

In all these groups the totally dominant form for Fabric 1 is the lid-seated jar. Necked jars and storage vessels occur in 'Belgic' grogged ware (Fabric 46). Both fabrics were in use simultaneously, thus the differences in fabric and form do not appear to be tribal or temporal but rather one of function. Most lid-seated jars are heavily sooted or blackened and appear to have been used as cooking pots. The ditch group of 831 sherds at MK345, Group 3, dated late first/early second century also produced only lid-seated jars in Fabric 1. The 369 sherds of shell-gritted ware composed a good proportion of the total – 44.4%. This kind of percentage is the average for the greater part of the second century.

Some diversification of vessel form took place in the first half of the second century AD. Lid-seated jar rims became more rounded and over the century the lid-recess evolved into a mere skeuomorphic groove (compare Fig 7, 6 from Group 3 with Fig 11, 8 from Group 6). Necked jars with simple angular or rounded everted rims in Fabric 1 appeared and began to take a share of the market; they are well potted, usually undecorated, though some may be rilled or bear single cordons or grooves.

Bowls in fossil-shell fabric made their first appearance in Milton Keynes sealed in a mid to late second-century pit (Group 6) at Woughton MK297 (Fig 11, 12–18). They are very similar to those produced at Harrold, Beds. at that time. The group produced seven bowl rims; three being copies of reeded-rim bowls, three with straight, out-turned rims, roughly rectangular or squarish in section, and one with a straight flange and slight bead. Triangular-sectioned pie-dish rims also appeared in this fabric during the mid to late second century, as was found in a small sealed group at Wood Corner MK64 F2 (R.M.K. 1987, 52–60).

The popularity of this fabric during the late first to second century at Milton Keynes is born out by

the percentages. In Group 4, dated late first to mid second century, it accounted for 38.75% of 511 sherds; in a sealed ditch group at Caldecotte, Group 5, dated early second to the third quarter of that century, it made up 40.1% of 384 sherds; in Group 6 of mid to late second century date it equalled 42.86% of 847 sherds and in the late second-century Group 7, containing 195 sherds, it accounted for 43.08%.

The results obtained from small groups of under 100 sherds or so are not so consistent. The feature at Wood Corner MK64, mentioned above, produced 88 sherds of which only 6% were in a shelly fabric; a larger percentage was in a grey sand-tempered ware. This is unusual for most late first to second-century pottery groups in Milton Keynes; it bears a closer resemblance to those from Northamptonshire sites. At Brixworth, where shell (calcite) gritted vessels were so common in the first century AD, by the mid second century in a pit containing 500 sherds only four were calcite-gritted (Woods 1970, 33). The large Antonine pits showed a similar picture, producing a mere fourteen calcite gritted sherds. Quinton during the first century AD produced many shelly lid-seated jars but by the Antonine period there the pottery was dominated by local sand-tempered vessels (Friendship-Taylor 1974, 37). It appears that the market in Northamptonshire was inundated in the second century with products from the local kilns, such as Ecton and Houghton (Johnson 1969, 75–79) almost totally ousting the shelly ware industry. There is an exception. At Irchester in the make-up of the earth rampart, dated to about 150–200 AD, fossil-shell vessels were still well represented (Knight 1967, Fig 10); such a presence may in part be due to a road believed to have been in existence between Harrold and Irchester in the Roman period (Viatores 1964, 290). The dominant shell-gritted form at Irchester was the lid-seated jar and in this respect the assemblage has much in common with second-century groups from Milton Keynes. Yet at Towcester, only 12 to 13 kilometres up the Watling Street from this area, second-century groups from the Grammar school (Brown and Alexander 1982) and Alchester Road suburb (Brown and Woodfield 1983), show a surprising lack of shell-gritted lid-seated vessels; their dominant shell-gritted form is the necked jar. Handmade, simple S-profiled vessels were also recovered, in a 'prickly shelly' fabric (Milton Keynes Fabric 1b; Towcester Fabric 44b (Brown and Woodfield 1983, Fig 33, 90–93)).

In Milton Keynes Fabric 1b is uncommon. Two sherds were recovered from the topsoil at Wymbush, a site dated late second to fourth century; a handful of unstratified 1b sherds came from mid second to fourth century Wood Corner; a handmade lid-seated jar, Fig 24, 3, was recovered from a second-century ditch at Holne Chase; and a simple S-shaped jar, Fig 25, 18, was dredged from the Ouzel bed, MK209, near Magiovinium.

Outside the city 1b has been found in stratified contexts and on each occasion the dating has been similar. At Towcester it was the major shelly fabric in a ditch dated to the last half of the second century AD (C. Woodfield pers.comm), whilst in Thornton it was recovered from a trench showing evidence of drying ovens, dated by the accompanying pottery to the mid to late second century (Mynard, pers. comm.).The production of these fairly crude handmade vessels may have been due to the considerable drop in quantity of the commmonplace shelly wares that occurred in the late second century. This drop may have been due to the many troubles that beset this period (Frere 1967, 251).

Table 1 Appendix 2 show this fall most clearly. The change is generally from 40–45% to a 20–15% level. For instance in the mid to late second century Group 6 the shell-gritted wares accounted for 42.86% whilst Group 8, dated to the very late second, produced only 20.43%.

At Wymbush, Group 9, a sealed layer dated late second to early third century produced 126 sherds of which 15.9% was in Fabric 1; all the rim sherds in this fabric were from necked jars. Such jars, with flat, out-turned rims appear to be a feature of the late second to mid third century in this area (see Fig 14, nos 10 and 11 for examples of the type). Group 10 from Willen dated late second to mid third also produced such a rim (Fig 17, 14); the group contained 120 sherds, 15.83% being in Fabric 1. At Wood Corner the stratified groups contained only small quantities of pottery but again these followed the general pattern; a late second to early third-century feature, F15, contained 13% in shell-gritted ware, whilst a third-century group, F20, produced the slightly higher proportion of 17%.

The mid to late third-century group from Wymbush, Group 11, contained 194 sherds and showed a surprising drop in the Fabric 1 level, producing a mere 1.54%. Unfortunately groups of this date are uncommon so it is difficult to assess whether this figure is atypical.

In the late third century the percentage levels for shell-gritted ware began to rise. In Group 12 from Wymbush, out of a total of 175 sherds, 25.71% was in Fabric 1. Small groups from Wood Corner produced similar figures. Percentages averaging 20–27% continued into the early-mid fourth century; Group 13 of this date contained 26.32% out of 133 sherds.

This general rise in shell-gritted ware is echoed elsewhere. For instance at Brixworth, Northants from the end of the third century there is a steady

increase in the number of calcite-gritted sherds, to such an extent that by about the mid fourth century AD it had become the normal fabric for cooking pots and storage jars (Woods 1970, 33).

In Milton Keynes the mid fourth century saw another increase in the percentages of this ware. This is also seen on many other sites in Buckinghamshire and neighbouring counties; at Shakenoak, Oxfordshire shell-gritted ware became at least ten times more common (Brodribb *et al* 1971, 68). Group 14 at Wymbush, dated to about the mid fourth century, contained 183 sherds of which 36.06% was in Fabric 1. All the shell-gritted ware rims, except three, were from necked jars of undiagnostic form; the exceptions (Fig 21, 5,6 and 12) were from hooked triangular-rimmed necked jars, a form recognised as typical of the post-350 period (Brodribb *et al* 1971, 68). There is a tendency for these later vessels to be black and fairly thin with widely spaced rilling. Other fourth century forms, invariably from topsoil or destruction rubble contexts, include storage jars and large open bowls, the latter commonly bearing a drooping, decorated rim (Fig 25, 29). Such contexts at the Bancroft villa produced high percentages for the shell-gritted ware, a fact which suggests that the ware continued to be in demand, and supplied, into the later fourth and possibly early fifth century. The percentages for these contexts are 30.79% and 29.82% of 1289 and 1284 sherds respectively. An area of topsoil from the Stantonbury villa produced 18.95% in Fabric 1 out of 343 sherds; this percentage is unexpectedly low. Group 17, tentatively dated late fourth to early fifth century, also produced a low percentage (for this ware) of 22.45%.

The quantity of Fabric 1a normally found in Milton Keynes is considerable and must have been supplied by a large industry or by a number of smaller related workshops. The kilns at Harrold are a possible source. The high quality of the fabric and standardized forms suggest that the organization may have been that of the rural nucleated workshop, established near the clay source perhaps to supply Irchester and the local villas. Harrold is known to have housed a complex of kilns, some of which, on excavation, contained both pottery and waster tiles in the same fabric (Brown 1972, 7). The manufacturing of both tile and pottery may indicate the gradual commercialisation of estate production, although this has its difficulties in that a villa, the heart of an estate, has not been found at Harrold. However, a report by the local farmer of herringbone walling suggests the footings of a stone building, and cropmarks and surface finds at nearby Carlton and Chellington indicate the presence of a substantial building on the other side of the river (Simco 1984, 100).

Shell-tempered tiles have a wide distribution – they have been found in London where they are known as South Midlands type – and stamped, or rather relief-moulded examples are also known, although not from a kiln site (Anon 1959, 138). Such tiles may be taken as further evidence of commmercialized estate production or perhaps ceramic production by official organizations, although the fact that at Harrold a wide range of pottery was apparently made simultaneously with the tiles does suggest a more commercial approach than that practiced by municipal or state producers. The longevity of production at the kilns, from the first to the fourth centuries and possibly into the fifth, appears to discount any army involvement, whilst a manufactory, (Peacock 1982, 129–151), with twenty or more workers appears too large a concern for the Harrold establishment. However, without the publication of the Harrold site it is impossible to be clear on this point and certainly production there was on extremely large scale.

Whichever organizational mode lay behind the shell-gritted industry it appears to have had a thriving distribution network, apparently based on river transport. The kilns were situated beside the Great Ouse, whose tributary the Ouzel flows through eastern Milton Keynes. The market town of Magiovinium lies on this tributary and may have been the outlet for much of the ware locally. The villa at Stanton Low where the stamped shell-gritted tiles were recovered was also adjacent to the Great Ouse and produced much pottery in this fabric (Jones 1958, 207).

A riverine distribution would also explain the dichotomy between the pottery of this area and that of neighbouring South Northamptonshire. It appears that the Ouse and Ouzel in northern and eastern Milton Keynes played major roles in determining the spread of shell-gritted pottery in this area whilst in Northamptonshire the River Nene determined the spread of sand-tempered pottery from the many kilns situated along its banks. This is not to say that roads were not used in the transport of pottery, for a percentage of sand-tempered Upper Nene did reach Milton Keynes, presumably by way of the Watling Street. However, in comparison to the quantity of shell-gritted ware within this area the percentage is remarkably small.

One interesting aspect of the shell-gritted ware is its fluctuating percentages. These may be reflections of economic, social or political upheavals. Unfortunately the final collapse of the industry is not recorded in any of the late assemblages although the lower percentages at Stantonbury (18.95%) and in Group 17 *may* indicate a weakening in 5th century trade.

The following illustrations show the range of vessel types. The dates given refer to contexts, unless

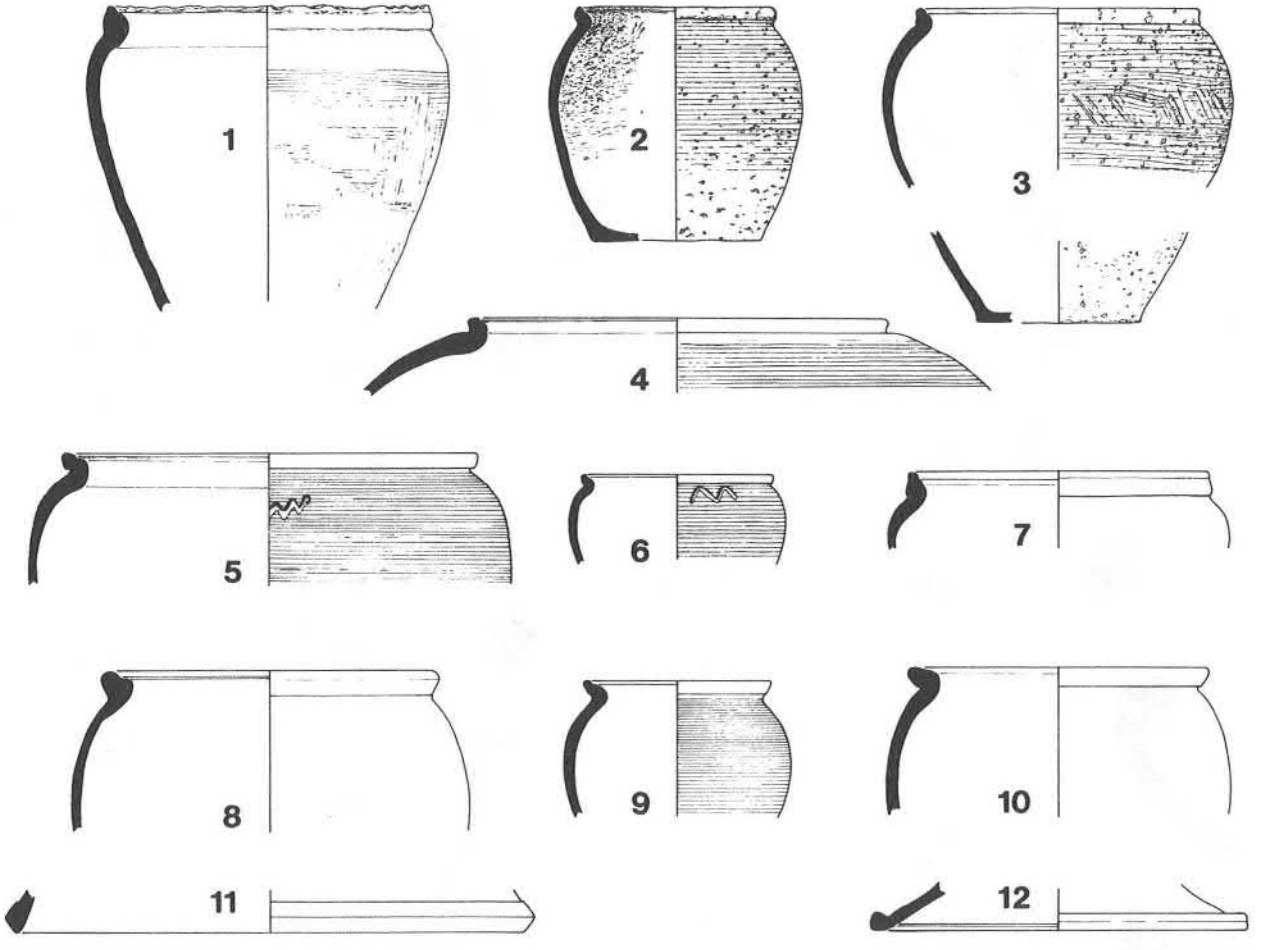

Figure 24: Local Shell Gritted Wares, nos 1–12, (Scale 1:4).

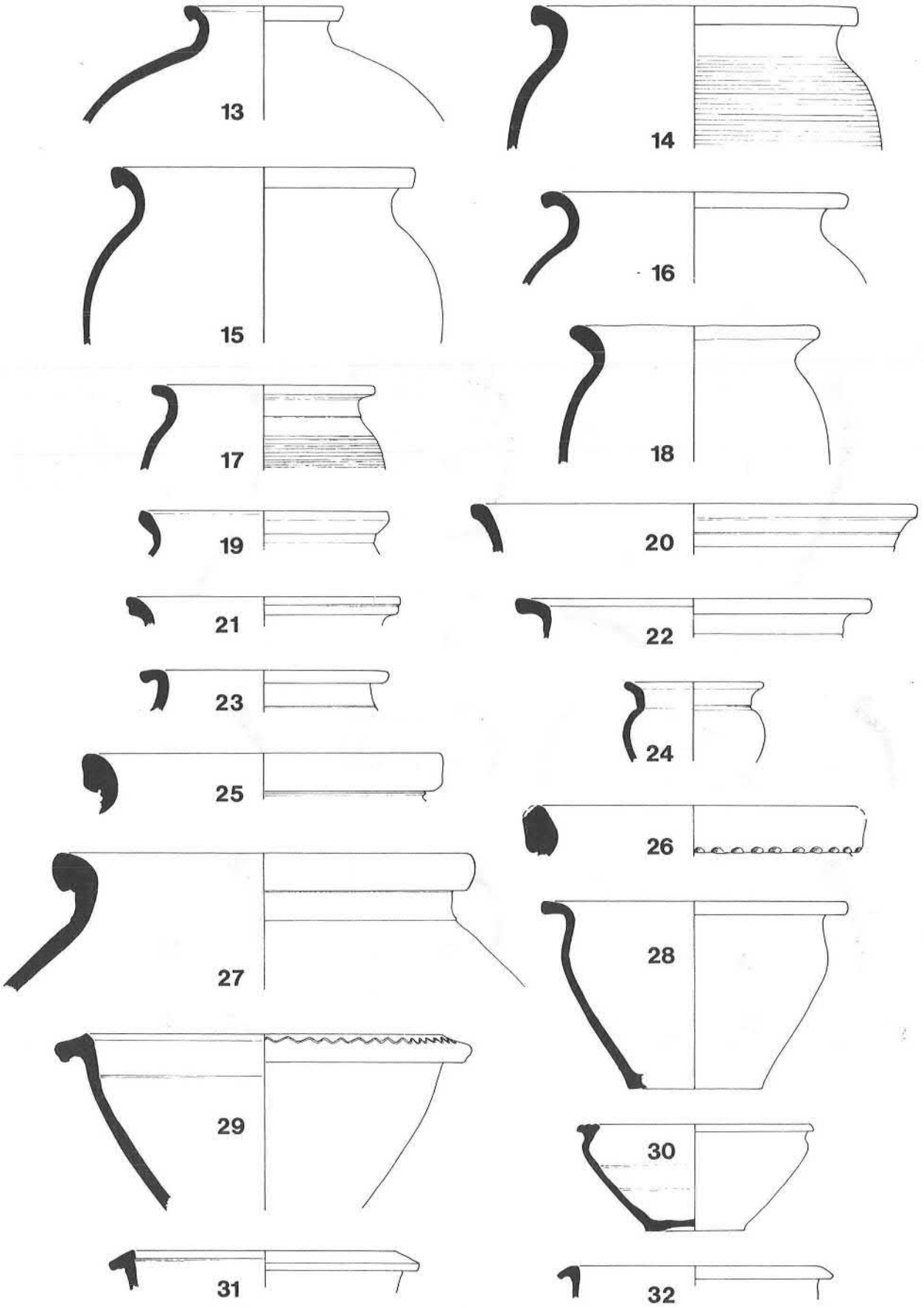

Figure 25: Local Shell Gritted Wares, nos 13–32, (Scale 1:4).

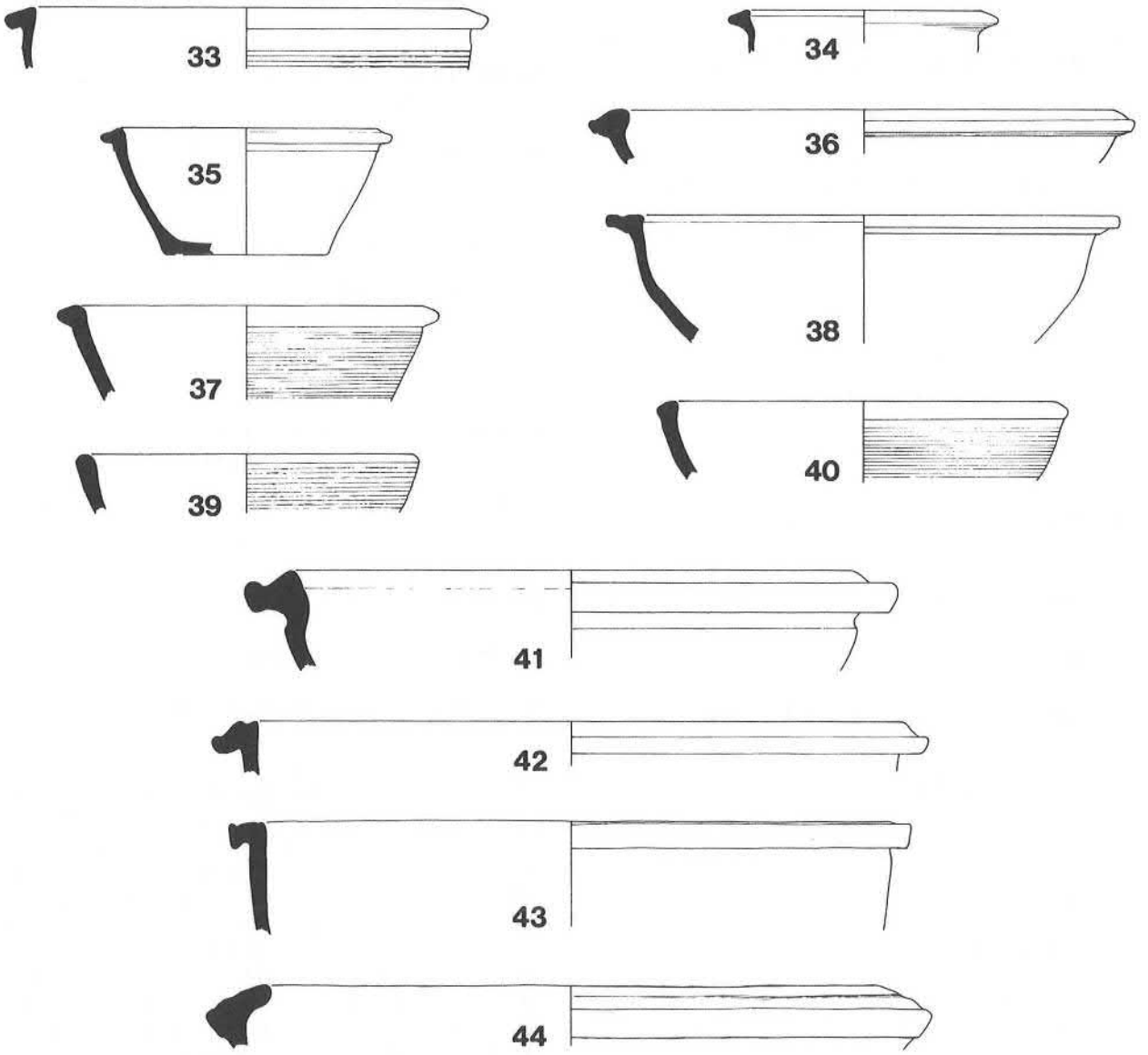

Figure 26: Local Shell Gritted Wares, nos 33–44, (Scale 1:4).

otherwise stated.(All Fabric 1a unless otherwide indicated)

Fig 24

1. MK100 P1, First Cent. handmade.
2. MK44 F10 (1), mixed dating predominantly mid first to early second Cent.; handmade.
3. Fabric 1b, MK AA T7, predominantly mid to late second Cent.; handmade.
4. MK105 Unstrat.
5. MK44 F10 H (1), mixed dating, predominantly mid first to early second Cent. Makers' mark?
6. MK44 186 C (3), mixed dating, predominantly second Cent. Makers' mark?
7. As above, no 1; wheel made, multiple-ledges.
8. MK45 AA T9, predominantly mid to late second Cent.
9. As above, no 8.
10. As above, no 8.
11. MK44 F111 E (1), second Cent.
12. MK44 F60 B (1), second Cent.

Fig 25

13. MK297 C F65, mixed dating, predominantly second Cent.
14. MK100 D2 mid/late second to late third/early fourth Cent.
15. MK209 Unstrat.
16. MK63 dark layer sealing cobbled surface, late third to fourth Cent.
17. As above, no 14.
18. Fabric 1b, MK209, unstrat. (vessel probably late second to early third Cent)
19. MK209 Unstrat.
20. MK297 Unstrat.
21. MK45 AA T9, predominantly mid to late second Cent.
22. As above, no 14.
23. As above, no 14.
24. MK44 L.100, mixed dating, largely late first to late second Cent.
25. MK45 Unprov.
26. MK45 AA T2, second to fourth Cent.
27. MK100 A2, mixed dating.
28. MK100 Unprov.
29. MK105 Destruction rubble over Building 6, fourth Cent.+
30. MK 44 F186 A (3), mixed dating, predominantly second Cent.
31. MK297 Unstrat.
32. MK44 F10 (1), mixed dating, predominantly mid first to early second Cent.

Fig 26

33. MK100 D2, mid/late second to late third/early fourth Cent
34. As above, no 33.
35. As above, no 33.
36. MK297 Unstrat.
37. As above, no 33.
38. MK45 Unprov.
39. MK105 (335), largely fourth Cent.
40. MK211/41 layer over ditch 57/58 (Group 13) thus early to mid fourth Cent. or later.
41. MK105 Destruction rubble, probably fourth Cent.+
42. MK45 Unprov.
43. MK44 L.216, second Cent.
44. MK297 F50, mixed dating.

ii Soft Pink Grogged Wares (Fig 27)

Fabrics 2a, 2b, 2c and 2d

This fabric was manufactured with a clay containing many clay pellets. As is the case with Fabric 1 there is no way of determining whether these pellets occurred naturally or were added to the potting clay as temper. Although the term grog is used in the title for this ware it is in fact purely a term of convenience; the pellets were not prefired nor do they have the angular shape commonly associated with grog. Thin-sectioning (see report page 100) shows them to be sub-angluar, rounded, or less frequently, angular in shape.

The Fabric 2 clay matrix shows marked similarities to underfired examples of the locally produced 'Belgic' Fabric 46 and this suggests that Fabric 2 might be of local manufacture. The enormous quantities of this material found on sites in this area from the end of the second century onwards also seems indicative of local production. It is hardly seen on sites in Northamptonshire, with

the exception of Towcester, which is linked to Milton Keynes by the Watling Street. For example, in the mid to late third-century pit at Thorplands only one vessel, no. 169, sounds convincingly like Fabric 2 (Hunter and Mynard 1977, Fig 14) whilst at Brixworth Fabric 2 does not appear to be represented at all (Woods 1970).

If produced locally, it is possible that Fabric 2 grew out of the 'Belgic' tradition, using the same clay source, basic pot form and similar decorative styles (though on Fabric 2 these are usually most basic). The dominant form is the wide-mouthed necked bowl, a development of the ubiquitous Belgic necked jar. The fabric is however very soft, powdery and inferior in quality to the 'Belgic' grogged wares. This may be the result of lower firing temperatures. Kiln 1 at Caldecotte (page 95), which produced well-fired 'Belgic' grogged vessels may have fired up to 900°C, whereas Kiln II (page100), which produced material like the early Fabric 2b, probably never greatly exceeded temperatures above 700°.

It may be that Fabric 2 was intentionally inferior in quality because the function of the vessels had changed. The range of forms found in the 'Belgic' grogged ware shows it to have been used both for the table and for storage, whilst Fabric 2 appears to have been used largely for the latter or as a container marketed for its contents (although occasionally small cups, small jars, and exceptionally, face flagons have been found (Brown and Woodfield 1983, Fig 28, 191). The basic vessel is however typologically unchanging, a fact which supports the container theory, for provided containers serve their purpose there is no need for them to evolve in response to fashion, as noted by Callender (1965) with regard to amphorae. It has also been noted that the triangular undercut rim commonly found on Fabric 2 vessels would facilitate sealing (Woodfield 1977b, 362). There may also have been some size standardization, with the majority of vesels having a rim diameter of between 200–340mm, but equally this may merely reflect a regularity useful when stacking jars in a kiln.

In the Walton report Mrs Woodfield drew attention to the similarity of form of the Fabric 2 vessels, therein described as rather coarse wide-mouthed orange jars with triangular undercut rims, to those of the Severn Valley type wares found at Great Buckman's Farm, Worcs (Woodfield 1977, 362). This similarity suggested that further work should be undertaken to determine whether the Milton Keynes vessels were related in anyway to the Severn Valley tradition or, as suspected, just a development of the local native industry.

Roberta Tomber, studying Severn Valley wares at Southampton University, agreed to do a petrological analysis on Fabric 2. Using the clay samples previously taken from the river terrace at Caldecotte for comparison, she determined that these clay samples correspond well with Fabric 2 and allowed verification of local production of the pottery. The fabric was anomalous to any fabrics of Severn Valley ware which she had examined previously.

The dominant vessel shape, a squat necked bowl, shallow in relation to its rim diameter, varies little over the period of its production. Some of the earlier versions, dating to about 150–170 AD, do however appear more bowl like, with a less obvious neck. The bowl, Fig 12, 37, from the mid to late-second century Group 6 at Woughton typifies this.

Another attribute useful for dating the earlier vessels is quality of fabric. In the second century, possibly also the early third century, the fabric can be either much sandier (Fabric 2b) or contain large shell and limestone inclusions (Fabric 2c). Despite the different texture and appearance of these variants petrological analysis has shown them to be from the same or a similar source.

In Group 6, dated mid to late second century, 7.32% of the 847 sherds are in Fabric 2. Of the four rims recovered in this fabric the three smaller vessels are in 2a whilst the storage jar rim Fig 13, 64, is in 2b. The form of this vessel is interesting for it resembles far more closely the 'Belgic' storage jar than the usual hook-rimmed Fabric 2 storage vessels.

The late second-century Group 7 produced a similar percentage, 8.72% out of 195 sherds. Of these, two of the vessels, represented only by body sherds, were in Fabrics 2b and 2c. The 51 sherds sealed beneath the destruction rubble of Room 4 at Bancroft villa produced 17.64% in Fabric 2. The large quantity of burnt samian recovered from this end of the building dates the destruction to the Antonine period, probably the later half of the decade 160–170 AD. Group 8, dated very late second century, produced 16.13% in this fabric.

By the late second or early third century Fabric 2 had begun to take an even larger share of the market. In Group 9 from Wymbush, which is of this date, 32.54% of the pottery was in Fabric 2. Two of the vessels are of the usual wide-mouthed necked bowl form, one in a very sandy 2b and the other in 2a (Fig 16,6 and 5 respectively), whilst the third vessel, represented only by a rim fragment is a hooked storage jar Fig 16,12, in Fabric 2c.

Apparently simultaneous with the rise in popularity of this fabric group came the decline of the Fabric 1 market. For example Fabric 2, in Group 5 from Caldecotte, amounted to a mere 1.82% of the 384 sherds whilst the shelly wares totalled 40.1%.

By contrast in the later Wymbush group, dated late second to early third century, fabric 2 equalled 32.54% and the shelly ware level had dropped to 15.9%.

The reasons for this change are not known. What is in evidence is that in the later part of the second century AD, the soft pink grogged industry was flourishing whilst at the same time colour-coated imports from the Lower Nene Valley and BB1 from Dorset also appeared. The question of 'cause or effect' arises – did the successful marketing of the soft pink grogged ware and other industries bring about the decline of the shell-gritted ware or did the decline create the demand which these industries filled?

It was during the third century that the local industries, especially that based on soft pink grogged ware, really dominated. In one feature at Wymbush, Group 11, dated mid to late third century , it equalled 58.25% of the 194 sherds. Its standard production vessel, the container, was complemented by the dishes and bowls, of BB1 form, in local grey and black sandy ware. A small number of shell-gritted necked jars also occurred, for by this date the common cooking pot form, the lid-seated jar, was no longer produced.

An exception to the preponderance of Fabric 2 in the third century is found in the late second to mid third-century Group 10, where the low Fabric 2 percentage, 11.66% of 120 sherds suggests that the group was formed largely during the earlier part of the suggested date range, followed by a less intense rate of deposition up to the mid third.

In contrast, at Walton, dated largely to the third century AD (with some material from the last part of the second and first half of the fourth century) the soft-fired orange jars with triangular undercut rims were the commonest form of vessel found (Woodfield 1977b, 367). At Bradwell Abbey Barn the pottery assemblage contained many rather squat, wide-mouthed jars in a soft dense orange/buff ware with a grey core, dated by comparison to material from Brixworth and Ecton to the third century AD (Niblett 1974, 493). Of special interest is the barrel storage jar, or cistern (op. cit. Fig 5, 34); this is not a common form, for only two others are known from the area, both from the topsoil and destruction levels at Wood Corner.

The amount of pottery in each feature at Wood Corner is small (unpublished statistical analysis by C. Woodfield, in Milton Keynes Archaeology Unit Archives); but even so, within each group the high proportions generally found for Fabric 2 in third-century contexts are echoed. For example, Fabric 2 was totally unrepresented in the mid to late second-century Group F2 but in the mid to late third century lower fill of the enclosing Ditch F22 it equalled 40% whilst equalling 30% in the late third to early fourth-entury upper fill of pit F25.

A similar level is seen at Wymbush in Group 12, dated to the late third century, which contained 35.4% in Fabric 2 out of 175 sherds; the rims from this group are not the typical triangular-headed type.

Group 13, dated early to mid fourth century, produced the much lower quantity of 15.04% of 133 sherds, whilst Group 14 of mid fourth century date contained 18.58% of 183 sherds. The figure for the small ditch group of only 46 sherds, Group 15, appears to be abnormally low, only 4.34%. Group 16 produced 10.14% in Fabric 2 whilst the latest assemblage Group 17, dated late fourth to early fifth entury, contained 12.24% (This same group also produced one of the few soft pink grogged sherds to survive with painted decoration, Fig. 23, 31, a style much on the increase in late Roman Britain). These percentages indicate that during the fourth century the quantity of Fabric 2 fell fairly dramatically and perhaps the painting of the pots was an attempt to halt this decline. The fall in the percentages is unlikely to relate to the revival of the shell-gritted ware or to the inundations of Oxford material, for each ware had a different function; for cooking, for the table and for the contents or storage. However, it may be that as so few sooted shell-gritted pots are found in the later period their function had changed to one of storage; hence the development of the hooked triangular rim on this ware. It appears though that as this development did not occur until the mid fourth century. The shell-gritted vessels may merely have replaced the soft, pink grogged containers rather than brought about their decline.

The topsoil and destruction rubble percentages for Fabric 2 have proved interesting. At Wymbush 297 sherds from such a level produced 31.65% whilst at Bancroft two groups of 1289 and 1284 sherds contained 10.62% and 11.6% respectively. These percentages suggest that the sites may have gone out of use at different periods (this excludes the activity of itinerants on both sites). For instance at Wymbush (RMK 82–90) it had been assumed that a stone building, built in the late second century, would have been occupied well into the fourth century; features on the site with a fourth-century date seemed to confirm this. However percentages of the Wymbush topsoil and destruction rubble pottery bore no resemblance to those of the same period on other sites in Milton Keynes; in fact the percentage levels indicated that the site had gone out of use in the late third century. For example, Fabric 2 reached 53.9% out of 152 sherds in the destruction rubble over the main building, 33.33% out of 48 sherds over the cobbled area and 31.65% in the topsoil, whilst fabrics like the shell-gritted ware and orange colour-coated Oxford,

which were plentiful in fourth-century assemblages, were not well represented. Yet despite this evidence it is probable that without the coin evidence the percentages might have been considered unreliable. The relevant section of the coin report says that the coins could be taken to show activity around the beginning of the third century continuing to some time after 270. The absence of coins dated between 222 and 268 is not significant because these coins are comparatively rare on all British sites. The absence of coins from 280 to 330 is a little more important because the issues of Carausius, Allectus, and the early House of Constantine are fairly common finds. There may therefore be a gap in occupation between say 280 and 335, though if this is unlikely from structural evidence or from the testimony of other finds the coin evidence may be safely disregarded. There is good evidence of activity from c. 330 to c. 360; after that the coins say little (Reece 1987, 128). The activity from c. 330 to c. 360 (due to itinerants?) can be seen in such features as MK211/42, Ditch MK211/57–58 and the burying of the coin hoard.

It is possible then that the pottery from the topsoil and destruction rubble, apart from merely indicating the general occupation dates, can be used, by means of the varying quantities of the fabrics, to determine other points. This is certainly true at Wymbush because of the preponderance of the soft, pink grogged ware.

Although Fabric 2 is regarded as a local product it is well represented at Towcester (Brown and Woodfield 1983) and has also been recognised at Deddington Castle, Oxfordshire (approx. 40 kilometres distant) (Sarah Green, pers.comm), Rainsborough (Northants Oxon border) and Chester (C. Woodfield, pers.comm.). Petrological analysis has proved the sherds at Deddington Castle to be from the same clay source as the material found in Milton Keynes (Tomber, thin section report see below. From the amount of this material found locally one imagines the industry to have been a large concern but unfortunately no kilns have yet been discovered. Tiles were also manufactured in this fabric; a number have a surface covering of a thin blue, black, brown, purple or reddish wash. As with the shell-gritted ware it is difficult to determine the modus operandi behind this industry, although a nucleated pottery or estate production appear the most plausible candidates, for the ware appears to have been distributed over too wide an area for a single workshop and is too localised for a manufactory (Peacock 1982). The production of both tile and pottery may point to the commercialisation of estate production, perhaps beginning with tiles solely for buildings on the estate and expanding to supply other villas with tile, followed by the production of pottery as containers in which to sell surplus estate produce. It is assumed that these vessels must have been traded for their contents rather than on their merit, for it is certain that even as newly-thrown pots their surfaces would have eroded rapidly, becoming powdery and cloying; a condition which is, and probably was, unpleasant to handle. With this in mind it is perhaps all the more remarkable that such vessels dominated the market in this area for over a century.

The illustrations show the range of vessel types. The dates given refer to contexts rather than the pot, unless otherwise stated

Fig 27
(All Fabric 2a unless otherwise indicated)

1. MK63 C.15, late second to late third Cent.
2. MK64 unstrat.
3. As above, No 1.
4. MK64 unstrat.
5. MK63 C.12, late third to fourth Cent.
6. MK63 C.16, third to fourth Cent.
7. MK45 unprov.
8. Fabric 2b, fieldwalking find (vessel probably late second to early third Cent).
9. MK63 C.18, late third to fourth Cent.
10. MK45 unprov.
11. Fabric 2c, MK44 F77, predominantly late first to third quarter second Cent.
12. MK45, unprov.
13. MK211/11, destruction rubble (vessel probably late third Cent).
14. MK45 AA T9 predominantly mid to late second Cent.
15. MK45, unprov.
16. MK309 T3 F8 (1), mixed dating, sherd probably fourth Cent.
17. As above, No 16.

Fabric 2 'Soft Pink Grogged Ware Thin-Section Analysis' by R. Tomber

Eleven sherds from Milton Keynes, together with ingle samples from both Deddington Castle, Oxon, and Canterbury, were examined in thin section under the petrological microscope. The aims of this analysis were to define the fabrics petrologically and investigate the possibility of local manufacture, as well as establishing the relationship between those sherds from outside Buckinghamshire and those from Milton Keynes.

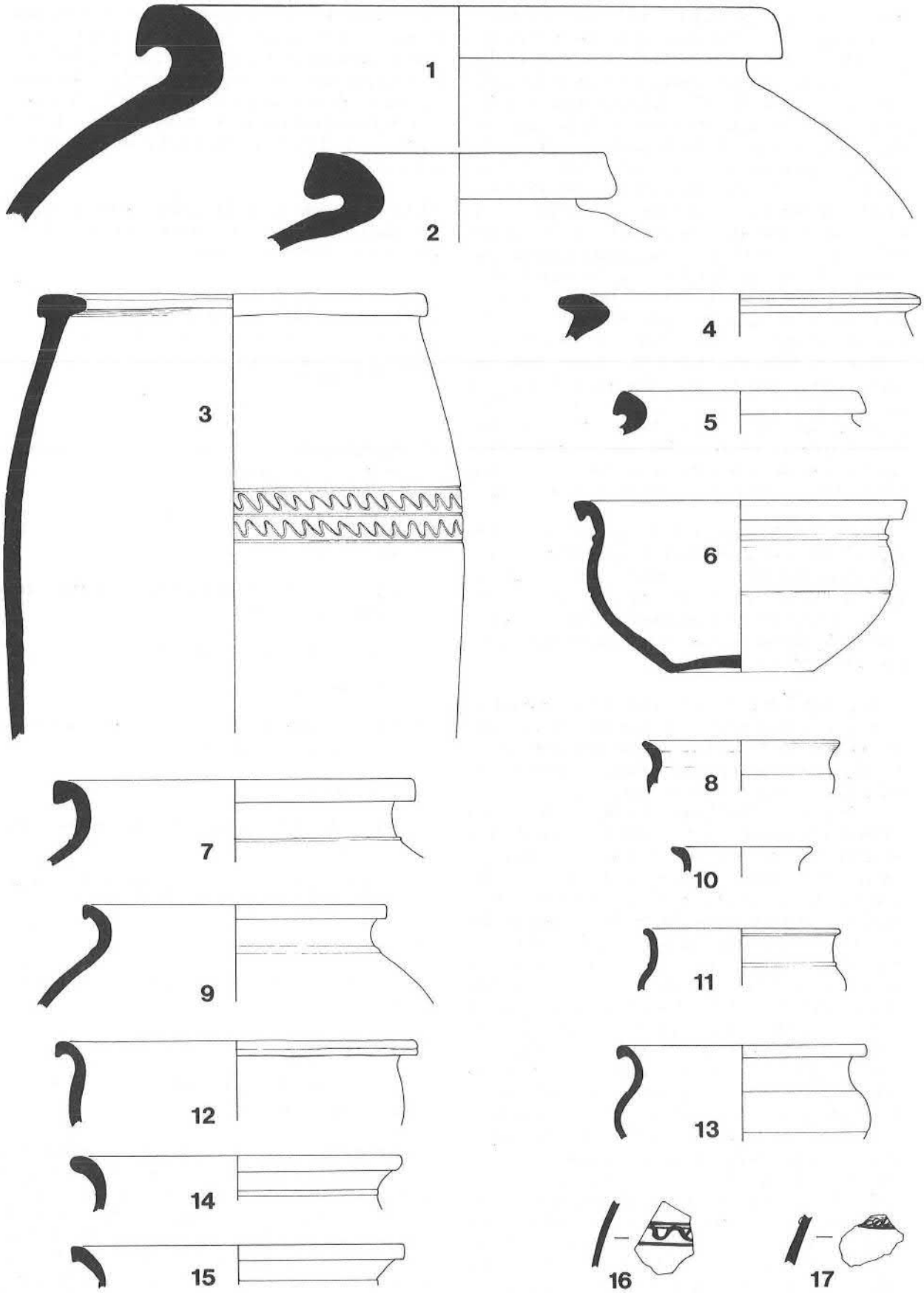

Figure 27: Local-Soft Pink Grogged Ware, (Scale 1:4).

Petrological examination of the sherds from Milton Keynes revealed that while there is a wide range of variability from sherd to sherd, in terms of quartz size and density and the type and abundance of inclusions they all share certain significant features and can be classified under a single fabric definition.

Common to all sherds is a clean clay matrix which is sparsely to moderately micaceous. It contains, primarily, muscovite mica, although rare fragments of biotite can be seen. In most cases the clay matrix is partially isotropic. Iron ore occurs, in varying amounts, in each thin section.

The dominant inclusion in all samples is sub-angular, angular or, occasionally, rounded quartz grains which can be placed into the following size groups: (see Note 1):

Small	0.05mm or less	c. 56–80%
Medium	0.06–0.10mm	c. 14–34%
Large	0.11mm or greater	c. 0–10%

Moderate to abundant quantities of sub-angular, rounded or, less frequently, angular clay pellets are distinctive to most sherds; some amounts of clay pellets are visible in each sample. The shape of these pellets, in some cases, may indicate intentional tempering. In size they range from c. 0.06–3.0mm, and most examples are at least 0.50mm. Occasional fragments of grog may be present but are not diagnostic of the fabric.

Other inclusions typical of the fabric, but not present in each thin section slide, are limestone and sandstone or siltstone. Limestone is normally less than c. 0.20mm with rare examples measuring as large as c. 1.5mm; sandstone or siltstone can be as large as c. 3.0mm, but is usually not greater than c. 1.0mm. While several different types of cements can be identified amongst the arenaceous rocks; a clay cement is most characteristic of these samples.

Tempers which are not common, but occur in most sections, include plagioclase and orthoglase feldspar, quartzite and microcrystalline silica.

Sample J is distinguished by the occurrence of shell fragments but this does not warrant a separate fabric group.

Clay samples taken from the Lias clay at Caldecotte correspond well to this pottery fabric and allow verification for local production of pottery.

The sherd from Deddington Castle can be compared to those from Milton Keynes and a similar source is suggested.

Under the petrological microscope the sample from Canterbury has a clean clay matrix, comparable to the Milton Keynes' sherds, which is partially isotropic. The fabric is moderately micaceous containing primarily muscovite mica, although isolated examples of biotite are present.

A moderate amount of sub-angular and angular quartz constitutes the major inclusion and is of the following sizes (see Note 2):

Small	0.05mm, or less	c. 60%
Medium	0.06–0.10mm	c. 34%
Large	0.11mm or greater	c. 6%

Although some clay pellets can be seen in thin section, it is distinguished from the fabric found at Milton Keynes by an abundance of grog inclusions, up to c. 2.0mm, most of which are at least 1.0mm in size. Other temper includes occasional fragments of sandstone, microcrystalline silica and plagioclase feldspar.

Although some characteristics of this sherd are shared with those from Milton Keynes, ie. the clay matrix and sandstone inclusions, the presence of grog indicates a distinct technology which suggests that a different source be sought for this fabric.

Notes

1. Quartz size is based on the counting of 50 quartz grains, per thin section slide, for four samples representing the range of variability in quartz inclusions. Size parameters for the individual sections are given below:

Sample C	Small	0.05mm or less	c. 56%
	Medium	0.06–0.10mm	c. 34%
	Large	0.11mm or greater	c. 10%
Sample E	Small	0.05mm or less	c. 80%
	Medium	0.06–0.10mm	c. 14%
	Large	0.11mm or greater	c. 6%
Sample H	Small	0.05mm or less	c. 64%
	Medium	0.06–0.10mm c.	30%
	Large	0.11mm or greater c.	6%
Sample J	Small	0.05mm or less	c. 74%
	Medium	0.06–0.10mm	c. 26%
	Large	0.11mm or greater	.0%

2. Quartz size is based on the measurement of 50 quartz grains.

iii Sand Tempered Wares (Figs 28–32)

Fabrics 3a, 3c, 3f, 3gj, 3k, 3n, 9a, 9b, 9f, 9j, 9xy, 9g/12, 9e/14, 19/29, 32a, 32b, 47a, 47ab, 47c, 47d/g, 47j, 47k

The sand tempered wares were divided into groups according to visually distinctive variations. These were checked by microscopic examination (×20). In an attempt to establish whether the distinctions were valid, a number were selected for thin-sectioning. This was undertaken by Rita Rattray, then of Leicester University, see report page 83. Ms Rattray determined 16 groups based on the size and proportions of the major inclusions; there is considerable overlap between many of these groups.

Thin-sectioning determined that the majority of the local sand-tempered wares were essentially the same fabric with minor differences based largely on surface colour; for example Fabric 3 for the greywares, Fabric 9 for the black wares and Fabric 19-29 for the less common oxidized material. Fabric 32 fits within this group although it tends to be heavier and found predominantly in late groups, whilst Fabric 47 is also essentially the same fabric but always earlier in date. Both 47 and 32 can be either oxidized or reduced. All of these are found within the thin section groups 5–16, Set B.

Thin-section groups 1–4, Set A, have a finer fabric than the above; within this division are found Fabrics 25/30, 28 and subgroups 3k, 9f and 9j. The pottery in this set is composed of much fine-grained argillaceous sand, silt and mudstone which may stem from the Kellaway Beds, or more probably the Oxford Clays, while Set B, although composed of the same clay, also contains a fine to medium-grained sand filler. This filler may originate from the Woburn Sands; of particular interest are the areas to the south-east around Little Brickhill and Great Brickhill; Groups 7 and 8 and 1 to 3 form a strong overlap between these two groups. Group 4 (Fabric 28) is shown by these relationships to merit a separate fabric number, (see Table 2).

There is some correlation between these sets and their vessel forms. Most produced wide-mouthed jars or bowls, dog-dishes and triangular-rimmed bowls but in Set A rouletted beakers and fine samian copies are also found. Set B predominantly produced imitation BB1 vessels, although its earlier material does have a wider variety of form (see discussion on Kiln II pottery page 100) while Fabric 28, Group 4, produced both the more traditional forms and some unusual vessels (see Fig 33).

Also included in the thin-section analysis were a small number of Medieval sherds known to have been produced around the Bow Brickhill area; they were placed by thin-sectioning in Groups 9 and 12. According to the notes that accompanied the petrological report, Group 9 may have come from an area of similar geology to Groups 7 and 8; interestingly enough Groups 7 and 8 (especially the latter) are almost entirely composed of sherds from the Caldecotte Kiln II, not far from the Brickhills.

There can be little doubt that the Caldecotte area was a good locality for potting – it was adjacent to the River Ouzel, had abundant sources of suitable clay and tempering material to hand, fuel from the heathland of the Woburn Sand Heights and farming surplus was available as much of Caldecotte consisted of a small rural agricultural/industrial community and the market town of Magiovinium was also close by. Such a prime location was exploited in the mid first century AD (Kiln I Caldecotte, see page 95), possibly to serve an early military station there, and as a settlement developed around the later fort (Woodfield 1977a, 384) the demands for pottery would have grown too.

This demand was apparently answered initially by two main wares, 'Belgic' grogged and shell-gritted wares, supplemented by a small proportion of romanized sandier fabrics; the latter occurred in forms that were still native. In Group 2, dated mid to late first century AD, the sand-tempered local fabrics equalled only 7.16% of the 475 sherds; the vessel forms were lid-seated jars, cordoned wide-mouthed jars or bowls, lids, a platter and a beaker. The internal moulding on the finely grooved platter (Fig. 6, 22) suggests Gallo-Belgic ancestry.

By the late first to early second century the level of sand-tempered wares had risen dramatically; Group 3 at Bancroft produced an overall percentage of 26.11% out of 831 sherds. There are wide-mouthed everted-rimmed jars/bowls with neck cordons, narrow-necked vessels, a rouletted beaker sherd (appearing for the first time in a local Fabric 3k), a hollow-rimmed bowl possibly copying a Cam. 246, (Hawkes and Hull 1947), and two lid-seated jars.

The Loughton Valley Sewer group, Group 4, dated late first to mid second century, produced the higher overall percentage of 27.79% out of 511 sherds. The forms are similar to those from MK345, Group 3, in having lid-seated blackware jars and a wide-mouthed cordoned jar/bowl. It also has a rounded 'dog-dish' and a neckless jar/bowl with a flattish out-turned rim and shoulder groove.

In the early to third quarter second-century assemblage Group 5 from Caldecotte, 24.99% of 384 sherds were in coarse grey/black sandy wares. There are no lid-seated jars; instead the group is dominated by round-sided triangular-rimmed bowls. There are also beaker rims, fragments of

wide and narrow mouthed jars and a single dog-dish.

Group 7 from the occupation layer at Saxon Street, MK313, dated late second century, has coarse sandy vessels surprisingly different in form to the previous group. There are three straight-sided dishes (one with an inturned rim and another with an internal groove at the junction of the wall and base), triangular-rimmed bowls with straight-sides and no beakers or narrow-mouthed vessels. However, it does have the usual wide-mouthed jars/bowls. In this group the grey/black sandy wares equal 26.66% of 195 sherds.

In both the Woughton assemblages Groups 6 and 8, the percentages for this ware have fallen. In the mid to late second-century Group 6 it amounts to 14.88% of 847 sherds, whilst in the very late second-century Group 8, it equals 10.75% of 93 sherds. The earlier group has many finely slipped vessels in this fabric with a fairly wide range of forms; this includes both round and straight-sided triangular-headed bowls/dishes, round and straight-sided dog-dishes and wide-mouthed jars/bowls with ephemeral cordons or grooves. The later group also has straight-sided dog-dishes and wide-mouthed jars/bowls, although the latter are not as fine as the earlier vessels.

This decline in the percentage in the later second century may be a reflection of troubles within the country, or it may merely be due to competition with other industries.

The late second to early third-century Group 9 from Wymbush consisted of 126 sherds sealed beneath a cobbled surface; it produced 16.66% in local sand-tempered wares. Most consisted of body sherds; the two rims present were from a droopy-rimmed pie-dish and a neckless rounded bowl with an out-turned rim, (Figs 16, 2 and 1 respectively).

In the late second to mid third-century Willen ditch, Group 10, the percentage had risen to 24.14%; the group contains a number of contradictions, one of these being that the high grey-black ware percentage suggests that much of the deposition took place in the third century whilst the level of Fabric 2 (11.66%) suggests that the majority of the deposition took place in the later second. The forms of the sand-tempered vessels in this group include a triangular-rimmed pie-dish, a handsome burnished black narrow-mouthed jar and a dish with an inturned rim, (Fig. 17, 5,21 and 8 respectively.

As the third century progressed local potters produced vessels that imitated BB1 forms more closely. In Group 11 at Wymbush, dated mid to late third century, where the coarse grey/black wares equalled 23.20% of 194 sherds, the forms consist of dog-dishes and flanged bowls; the latter are decorated with burnished interlocking arcs so typical of BB1.

As a contrast Group 12 from Wymbush, largely of late third century in date contained many wide-mouthed everted-rim jars or bowls in Fabrics 3/9, as well as two dog-dishes. These grey-black wares equalled 25.14% of the 175 sherds, whilst Fabric 19/29 accounted for another 8.00%; however these oxidized sherds were all part of one vessel, thus if an average of three pieces is used to represent this one vessel the total local sand-tempered percentage is 26.85%.

A later Wymbush feature, the ditch which contained Group 13, dated early to mid fourth century, contained 18.79% out of 133 sherds, in coarse grey/black wares. Surprisingly for this date there are no flanged-bowl fragments. There are four dog-dish rims, two with intersecting arc decoration, a large droopy-rimmed dish and an intriguing and unusual stamp-decorated bowl/jar (Fig 20, 10). The stamps consist of a vertical row of rectangles and a possible rosette which is poorly impressed. The pieces do not appear to belong to the stamp-impressed tradition of the early Roman period; (S. Elsdon, pers.comm) possibly they are the work of a local potter copying the impressed decoration which was so popular on Oxford wares in the fourth century AD (Young 1977) or they are contamination from an early Saxon import (T. Pearson, pers.comm.). From this early to mid fourth century period there is a noticeable decline in the percentages of the sand-tempered wares, although they are still well represented, and it is tempting to see such decoration as an attempt to regain markets from the Oxford potters.

In the mid fourth-century Group 14 at Wymbush the sand-tempered wares percentage had further fallen to 9.29% of 183 sherds. This percentage was composed largely of body sherds, with two wide-mouthed jar/bowl rims. Ditch G (Group 15) at Bancroft, dated mid to late fourth century, produced 4.34% (out of a small sample of only 46 sherds) whilst the other assemblage of this date, Group 16 from Caldecotte, produced 14.48% in body sherds only. The latest group from Bancroft, Group 17, contained 12.24%. The destruction rubble at Bancroft gave similar percentages; 14.56% of 1284 sherds and 10.39% of 1289 sherds, whilst the Stantonbury topsoil rubble produced 8.74% of 343 sherds. At Wood Corner it was noted by Mrs Charmian Woodfield (pers.comm) that the production of the grey/black wares in the last half of the fourth century appeared to be minimal. A rim of Fabric 32a (Fig 30, 25), the form of which closely resembles an Alice Holt 1A-16 vessel, came from the unstratified levels at Wood Corner; it looks like the work of an Alice Holt trained potter

using a different (?local) clay source (Lyne, pers.comm). At Towcester, however, the later coarse greywares (Tow. Fab. 30) fluctuate from a 4.3% level in the c. 330–355 AD period to a 16% level in the years between c. 355–370+ AD (Brown and Woodfield 1983, 80). With such a range of percentages occurring in the fourth century it is difficult to be sure of the state of the local sand-tempered industry; it does not appear to have been as successful as it had been in earlier centuries although still able to maintain a not inconsiderable presence through the later years.

Early sand-tempered wares and possible modes of production

Kiln II (see pages 100–106), dated late first to mid second century, was found in the Caldecotte area in 1982. The majority of the pottery from the kiln and its immediate area was in sand-tempered Fabric 47. Other fabrics that look different by eye and under x 20 magnification were also found and possibly produced at the kiln; this includes examples of Fabrics 46p and 46n, Fabric 9xy and a small number of Fabric 3 greyware sherds.

From the material found at this kiln and from dated groups recovered elsewhere in the area it is apparent that early local sand-tempered wares were produced in a wide variety of forms, unlike the fairly narrow repertoire adopted in the later Roman period. This early range covered copies of Belgic platters, samian copies, beakers, wide-mouthed jars or necked bowls, lid-seated jars, storage jars, narrow-necked flasks, shallow dishes, deep bowls and lids. The fabrics of these various vessels, although based on the same, or similar, clay source also vary considerably, again unlike the much standardized late ware; for example Kiln II products could vary from a sandy blue-grey ware (47a) to a soft open-textured buff ware (47k).

It is difficult to ascertain the exact nature of the pottery produced at Caldecotte but the presence of a kiln rather than open-firing suggests that the work was fairly advanced technically and important economically. The pots were competently thrown, but they are coarse, unstandardized and probably only intended for the localmarket. Their production may equate with that of the 'Individual Workshop' (Peacock 1982, 9). In its simplest form this consisted of an isolated pottery, normally in a rural area, which produced coarse earthenware for a very local market. A number of such unrelated potteries might help explain the presence of such a wide range of forms and sand-tempered fabrics as is found in this area in the early Roman period. In the modern examples mentioned by Peacock the potters produce their goods during the summer months and for the rest of the year find employment elsewhere.

Whatever the true nature of the Caldecotte pottery it appears to have been a small concern. By the beginning of the second century AD pottery seems to have been manufactured in every inhabited locality where suitable clay was available (Corder 1943, 153). Northamptonshire for instance had many small potteries, whilst in Buckinghamshire second-century kilns are known from Fulmer and Hedgerley. Both of these potteries have similarities with the Caldecotte kiln II; the waste material in the Fulmer kilns showed the same range of colouring, from a very soft orange/red to hard grey and black/red pottery (Tarrant and Sandford 1972, 178) whilst at Hedgerley two main varieties of ware appeared on superficial examination: one is hard and grey, the other softer and buff-coloured (Cottrill 1937, 272). All these differences seem to be accidents of firing and presumably the variation of the fabrics found in the Caldecotte Kiln II can be similary explained. Interestingly enough, in all this variation of the Kiln II products one can see the predecessors of both the later major local wares, Fabrics 2 and 3/9.

Later sand-tempered wares and possible modes of production

Although essentially later than Fabric 47, examples of Fabrics 3, 9 and 19/29 have been found in earlier groups and on such occasions in some fairly unusual forms, (see Fig. 29,1) although this is the exception rather than the rule. The overwhelming majority of these wares were produced in a fairly standardized range of forms, namely straight-sided dishes (dog-dishes), triangular-rimmed bowls/dishes, flanged bowls and a small number of jars. Their kiln site has not yet been found. Although it is believed that these coarse sand-tempered wares were local, the type – in form and colouring – was widespread throughout the Roman period. At Gadebridge, Hertfordshire, the pottery from the filling of Room 20, dating from about the second quarter of the fourth century up to c. 353 AD, included numerous flanged bowls and straight-sided dishes in a hard, dark grey fabric with burnished black surfaces (Neal 1974, Figs 105–106), Verulamium had many triangular-rimmed dishes and straight-sided dishes in a hard grey burnished ware in deposits dated 130–150 AD and 150–155/160 (for example Frere 1972, Figs 128 and 129), and flanged bowls and straight/sided dishes were found in the later deposits ie. the cellar B19, 310–315 AD (*op.cit.* Fig 135). At Brixworth in Northamptonshire pie-dishes first appeared about 120 AD, whilst shallow straight-sided dishes and flanged bowls in a burnished black ware were late third or fourth century in date (Woods 1970, 11). In Bedfordshire too, the Radwell Gravel Pits excavation produced a late Romano-British farmstead with many flanged and straight-sided dishes in sandy grey and black wares (Woods 1973).

Imitation black-burnished ware, or at least imitations of the forms, were obviously desirable com-

modities from the second to the fourth centuries. BB1 vessels were used by the Roman army for their strength and basic utilitarian forms and it may be this latter attribute which explains the popularity of their imitators.

What of the industries that produced these sand-tempered predominantly grey and black vessels? Genuine BB1 ware never sold in quantity in this area, which suggests that the home potteries had either proved too strong to compete with or that the traders did not even attempt a 'hard sell' here, preferring to select areas that were mutually exclusive (Bradley 1971). BB1 did find a small niche in the late second to early third-century markets of Milton Keynes - a time which coincided with a decline in the percentage of the local grey/black wares (the percentages dropping from around a 26% level for most of the second century to 10–16% in the late second to early third century). However, this did not enable the outside traders to establish a firm hold, for by the mid to late third century the local greywares were taking 23–26% of the market again.

Obviously, whatever the cause of the decline, the greyware industry was remarkably resilient. As a contrast, the fossil-shell potteries, which had been taking over 40% of the market in the second century, took a considerable length of time (up to the mid fourth century) to regain a similar standing. Presumably there were many factors which resulted in this difference between the two industries, but could one of these have been the initial organization? The fossil-shell pottery at Harrold, Beds, appears to have been a large concern – producing tiles as well as pottery (Brown 1972) – and if this were the case any political and economical upheavals might have caused greater problems for the larger business than for the smaller more versatile potteries. It has been suggested by Peacock (1982, 9) that the nucleation of potteries entailed good co-operation between the various individuals involved and this may have had a most important advantage in that during times of misfortune practical assistance would have been available or co-operative schemes developed to finance capital outlay. Nucleation would also have been characterized by a fairly standardized range of products, such as is found within the later local greywares. However, against this, nucleation would have left unmistakable archaeological evidence, as with the Oxfordshire and Nene Valley kilns and as yet this has not been found.

There is however another possible form of nucleation which would not be archaeologically obvious and that is the model suggested for the Severn Valley, black-burnished 2 and East Midland greywares (Peacock 1982, 98). In this model the kilns are scattered along waterways, which in effect shortens the distance between potters so that in some respects they operate as a rural nucleated concern, as well as continuing to operate as an individual workshops in their own right (The latter fact may explain some of the more unusual forms found in this fabric, for example the anomoly of Fabric 32). Because of ready access via the waterway the produce could be collected and distributed easily by the middleman. Although it cannot be classed as a major waterway could the higher reaches of the Ouzel which flow through the Woburn Sands Heights have been the base for these potters? The Heights are an infertile region and there can be little doubt that pottery production could have been economically important to the inhabitants of the area.

Other models of production can be suggested. At Portchester a number of greyware sherds were selected for heavy mineral analysis, the result of which suggested a number of different points of origin. It was thought that about 75% of the greywares came from within an eight to sixteen kilometre radius, or even less, of Portchester, while only some 25% from further afield, about 30–50 kilometres (Fulford 1975). Such findings suggested the presence of a scatter of small greyware workshops in the hinterland behind the town, and it is possible that this pattern was repeated throughout the civil zone of the province (Peacock 1982, 90). But if Milton Keynes and the surrounding area had a scatter of small greyware workshops, how does one explain the uniformity of pot form? Could there have been an overall directive or was it simply the production of the best basic utilitarian vessels? If there was a directive, the production system would have had greater affinities to the domestic industry as described by Marx (1918, 509). Peacock (1982), described this as a dispersed manufactory where the work was centrally directed by the proprietor who provided materials, set standards and bought back the finished produce. Any manufactory, dispersed or otherwise, required capital outlay, whilst within the workshop system investment would have been modest, the largest input being one of time. If the greyware industry was based on workshops and its rivals, the shelly and soft pink grogged industries, were based on larger concerns these factors might well go some way to explain how the local sand-tempered wares were able to survive in a fairly consistent fashion up to and beyond the mid fourth century AD despite the economic and political upheavals of the Roman era.

The illustrations: To show the range of vessel types. The dates given refer to contexts rather than the pot, unless otherwise stated.

Fig 28, Fabric 3

1. Fabric 3g/j MK100 P2, mid/late second to late third/early fourth Cent.

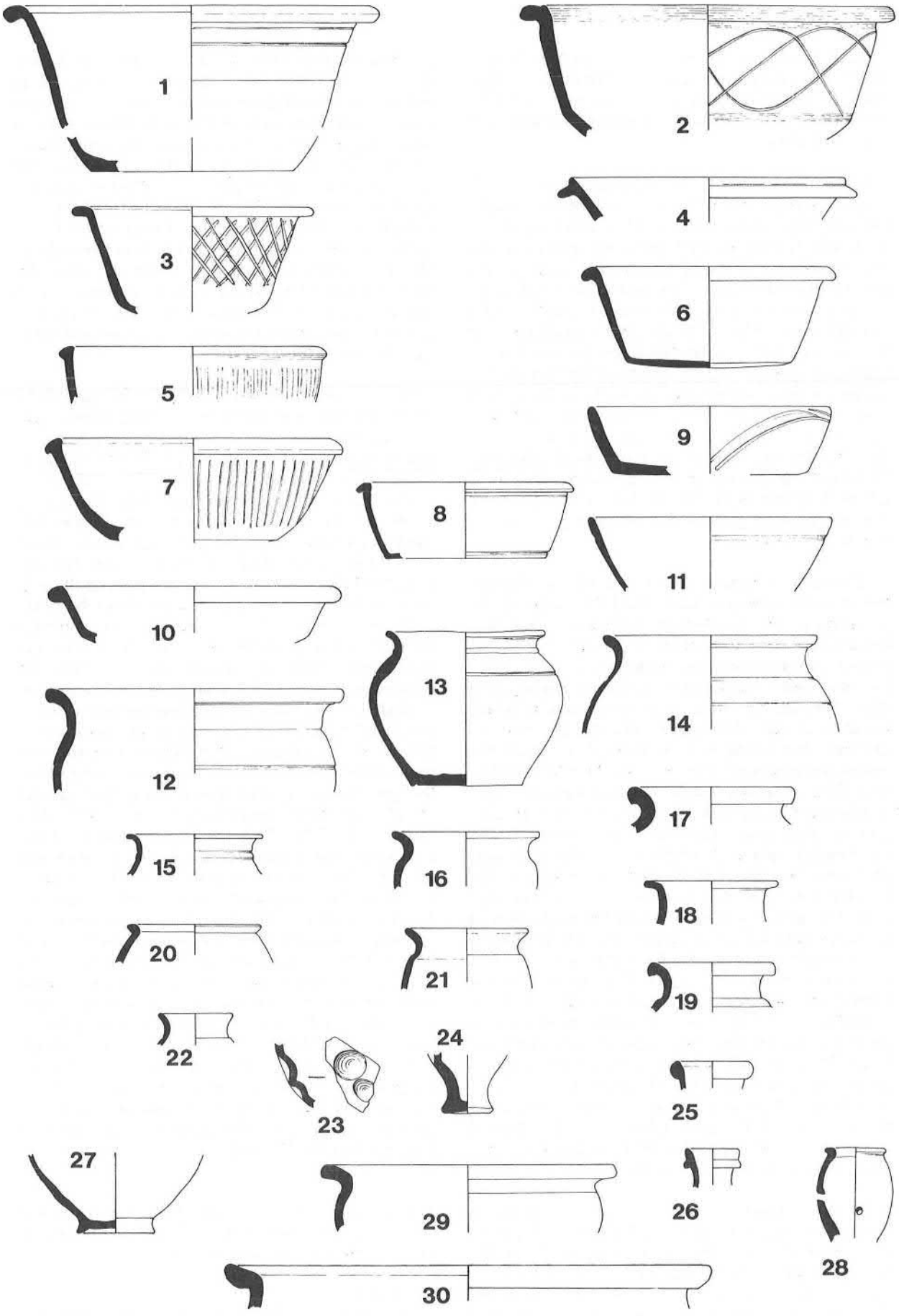

Figure 28: Local Sand Tempered Ware, Fabric 3, (Scale 1:4).

2. Fabric 3n M18C 802, mixed dating.

3. Fabric 3k MK45 unprov. (vessel probably second Cent.)

4. Fabric 3a MK211/3, destruction rubble (vessel probably late third Cent.)

5. Fabric 3a MK301 S1 (1), disturbed second Cent. soil level.

6. Fabric 3g/j MK100 A2/W3, second to fourth Cent.

7. Fabric 3a MK45 A/A T7, second Cent.

8. Fabric 3k MK44 F50, second Cent.

9. Fabric 3a MK105 (200), third to fourth Cent.

10. Fabric 3a MK44 F165 E (1), mid first to mid second Cent.

11. Fabric 3g/j MK44 F165 B (1), mid first to mid second Cent.

12. Fabric 3a MK100 D2, mid/late second to late third/early fourth Cent.

13. Fabric 3c MK44 F165 A (1), mid first to mid second Cent.

14. Fabric 3c MK45, unprov.

15. Fabric 3c MK44 F40 A (1), late first to mid second Cent.

16. Fabric 3n MK45, unprov.

17. Fabric 3a MK45, unprov.

18. Fabric 3g/j MK211/20, rubble and topsoil layer, late second to fourth Cent.

19. Fabric 3a MK100 D2, mid/late second to late third/early fourth Cent.

20. Fabric 3a MK45 AA T9, predominantly mid to late second Cent.

21. Fabric 3c As 19 above.

22. Fabric 3a MK45, unprov.

23. Fabric 3a MK105 (205), fourth Cent, probably post-350

24. Fabric 3a MK63, unstrat.

25. Fabric 3a MK105 (399), rubble.

26. Fabric 3a MK105 (379), topsoil.

27. Fabric 3c MK44 F165 A (1), mid first to mid second Cent.

28. Fabric 3a As 19 above.

29. Fabric 3a MK211/6, destruction rubble, largely late third Cent.

30. Fabric 3a MK44 F165 E (1), mid first to mid second Cent.

Fig. 29, Fabric 9

1. Fabric 9a MK44 F9 B (1), late first to mid second Cent.

2. Fabric 9a MK45, unprov.

3. Fabric 9a MK44 F65 B (3), second Cent.

4. Fabric 9a MK44 L.100, mixed dating, largely late first to late second Cent.

5. Fabric 9xy MK44 F86 B (1), late first to early second Cent.

6. Fabric 9f MK301 S1 (1), disturbed second Cent. soil level.

7. Fabric 9a MK44 F30 G (1), early to third-quarter second Cent.

8. Fabric 9a MK44 F165 B (1), mid first to mid second Cent.

9. Fabric 9f MK44 F108 H (1), mixed dating, predominantly late first to late second Cent.

10. Fabric 9a MK100 D2, mid/late second to late third/early fourth Cent.

11. Fabric 9a MK313, unstrat.

12. Fabric 9a As No 10 above.

13. Fabric 9a MK44 F186 A (3), mixed dating, predominantly second Cent.

14. Fabric 9e/14 MK301 S1 F125, mixed dating, second to fourth Cent.+

15. Fabric 9f MK44 F165 A (1), mid first to mid second Cent.

16. Fabric 9a As No 10 above.

17. Fabric 9a MK63, unstrat.

18. Fabric 9f MK44 F11 (1), largely second to early third Cent.

19. Fabric 9a MK297 F43, early to mid second Cent.

20. Fabric 9a MK211/11, destruction rubble (vessel probably late third Cent .)

21. Fabric 9b Simpson, unstrat. (but adjacent to a fourth Cent. ditch). Copy of a BBI handled fish dish.

22. Fabric 9g/12 M211/19, rubble and topsoil spread.

23. Fabric 9f MK44 F30 F (1), early to third-quarter second Cent.

24. Fabric 9a MK44 F40 B (1), late first to mid second Cent.

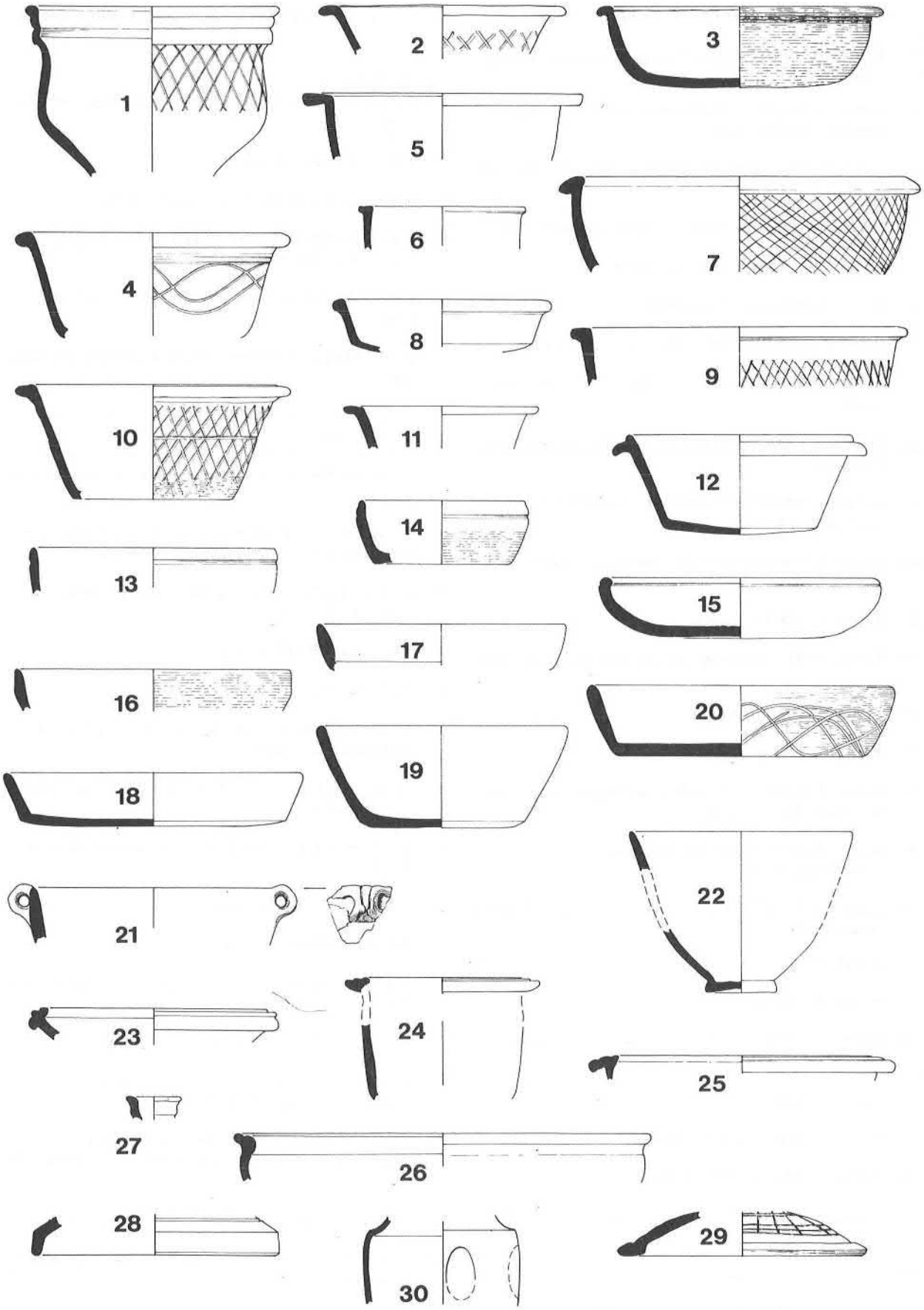

Figure 29: Local Sand Tempered Ware, Fabric 9, (Scale 1:4).

25. Fabric 9b MK44 L 180, second to early third Cent.

26. Fabric 9xy MK105 (340), second Cent.

27. Fabric 9a MK44 L.216, predominantly second Cent.

28. Fabric 9xy MK63, unstrat.

29. Fabric 9xy MK45, unprov.

30. Fabric 9j MK44 F186 A (1), mixed dating, predominantly second Cent.

Fig. 30

1. Fabric 9a MK44 F108 G (1), mixed dating, predominantly late first to late second Cent.

2. Fabric 9a MK45, unprov.

3. Fabric 9xy MK44 L.124, mixed dating, predominantly second Cent.

4. Fabric 9a MK44 F30 G (1), early to third-quarter second Cent. Form very similar to vessels in S.P.G. Fabric 2.

5. Fabric 9a MK45, unprov.

6. Fabric 9xy MK44 F165 A (1), mid first to mid second Cent.

7. Fabric 9a MK100 D2, mid/late second to late third/early fourth Cent.

8. Fabric 9a MK45 AA T2, second to fourth Cent.

9. Fabric 9xy MK44 F197, largely late second to early third Cent.

10. Fabric 9a MK45, unprov.

11. Fabric 9e/14 MK297 F37, second Cent.

12. Fabric 9xy MK45, unprov.

13. Fabric 9f MK45, unprov.

14. Fabric 9a MK45 AA T2, second to fourth Cent.

15. Fabric 9a MK71 F39/40, late first Cent.

16. Fabric 9a MK100 D2, mid to late second to late third to early fourth Cent.

17. Fabric 19/29 MK45 AA T9, predominantly mid to late second Cent.

18. Fabric 19/29 MK211/31 topsoil and rubble.

19. Fabric 19/29 MK64 P17, topsoil.

20. Fabric 19/29 MK64 P75, topsoil.

21. Fabric 19/29 MK64 P31, topsoil.

22. Fabric 19/29 MK211/15 destruction rubble, largely late third Cent.

23. Fabric 19/29 MK211/41, early to mid fourth Cent.

24. Fabric 19/29 MK44 F165 B (2), mid first to mid second Cent.

25. Fabric 32a MK64 P12, topsoil. Copy of an Alice Holt class A1–16 vessel (M. Lyne, pers.comm.).

Fig 31, Fabric 47

1. Fabric 47a MK44 F187, late first to late second Cent. (Vessel probably late first to early second Cent).

2. Fabric 47c MK44 F10 H (1), mixed dating, predominantly mid first to early second Cent.

3. Fabric 47c MK71 E4, late first Cent.

4. Fabric 47a MK45 AA T9, predominantly mid to late second Cent.

5. Fabric 47dg MK100 D2, mid/late second to late third/early fourth Cent.

6. Fabric 47c MK100, unprov.

7. Fabric 47j MK44 F58, late first to early second Cent.

8. Fabric 47k MK44 F108 K/J (1), mixed dating, predominantly late first to late second Cent.

9. Fabric 47ab MK44 F10 (2), mixed dating, predominantly mid first to early second Cent.

10. Fabric 47dg MK44 F86 A (1), late first to early second Cent.

11. Fabric 47j MK105 (720), destruction rubble (over early building).

12. Fabric 47j MK44 F77 (1), predominantly late first to the third-quarter second Cent.

13. Fabric 47a MK100 D6, predominantly second Cent.

14. Fabric 47dg MK44 F62 A (1), early to third-quarter second Cent.

15. Fabric 47a MK71, unstrat.

16. Fabric 47a MK44 F161 A (3), second Cent.

17. Fabric 47j As no 14 above.

18. Fabric 47a MK105, topsoil.

19. Fabric 47k MK44 F187, late first to late second Cent.

20. Fabric 47a MK301/88, early to third-quarter second Cent.

21. Fabric 47dg MK44 F10 (1), mixed dating, predominantly mid first to early second Cent.

22. Fabric 47j MK44 L.216, second Cent.

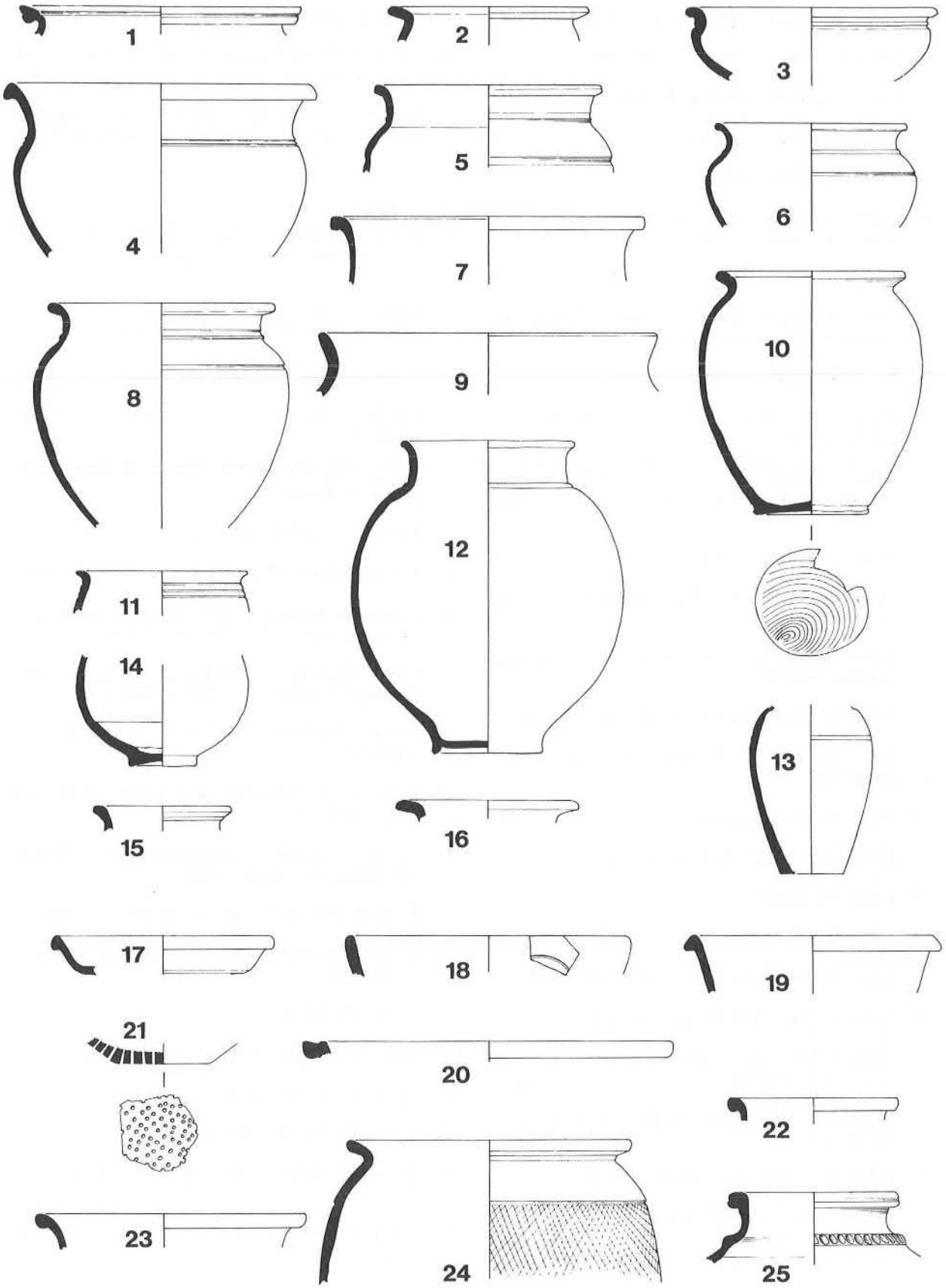

Figure 30: Local Sand Tempered Ware, Fabric 3, nos. 1–16, Fabric 19/29, nos. 17–24 and Fabric 32, no. 25, (Scale 1:4).

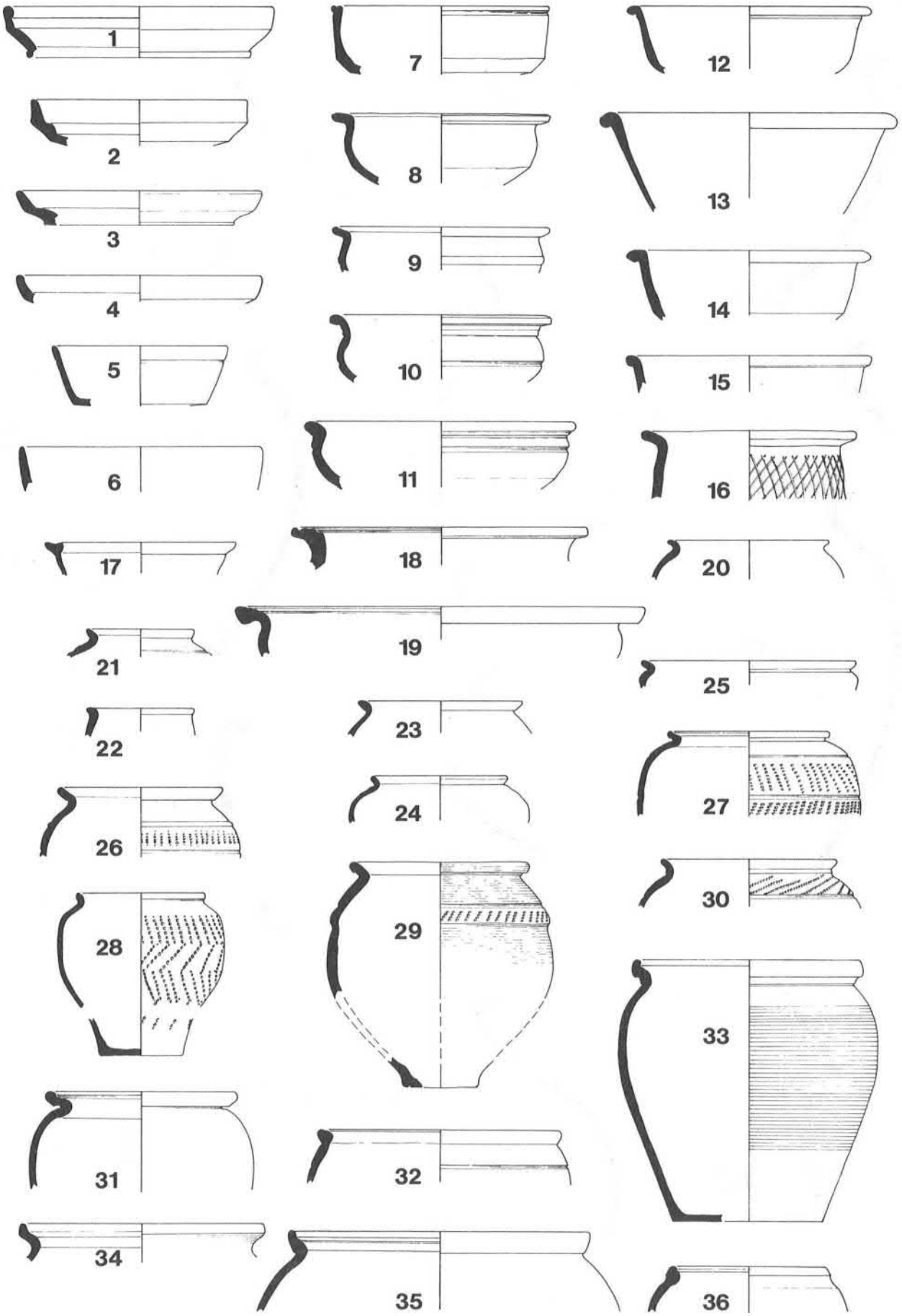

Figure 31: Early Local Sand Tempered Ware, Fabric 47, nos. 1–36, (Scale 1:4).

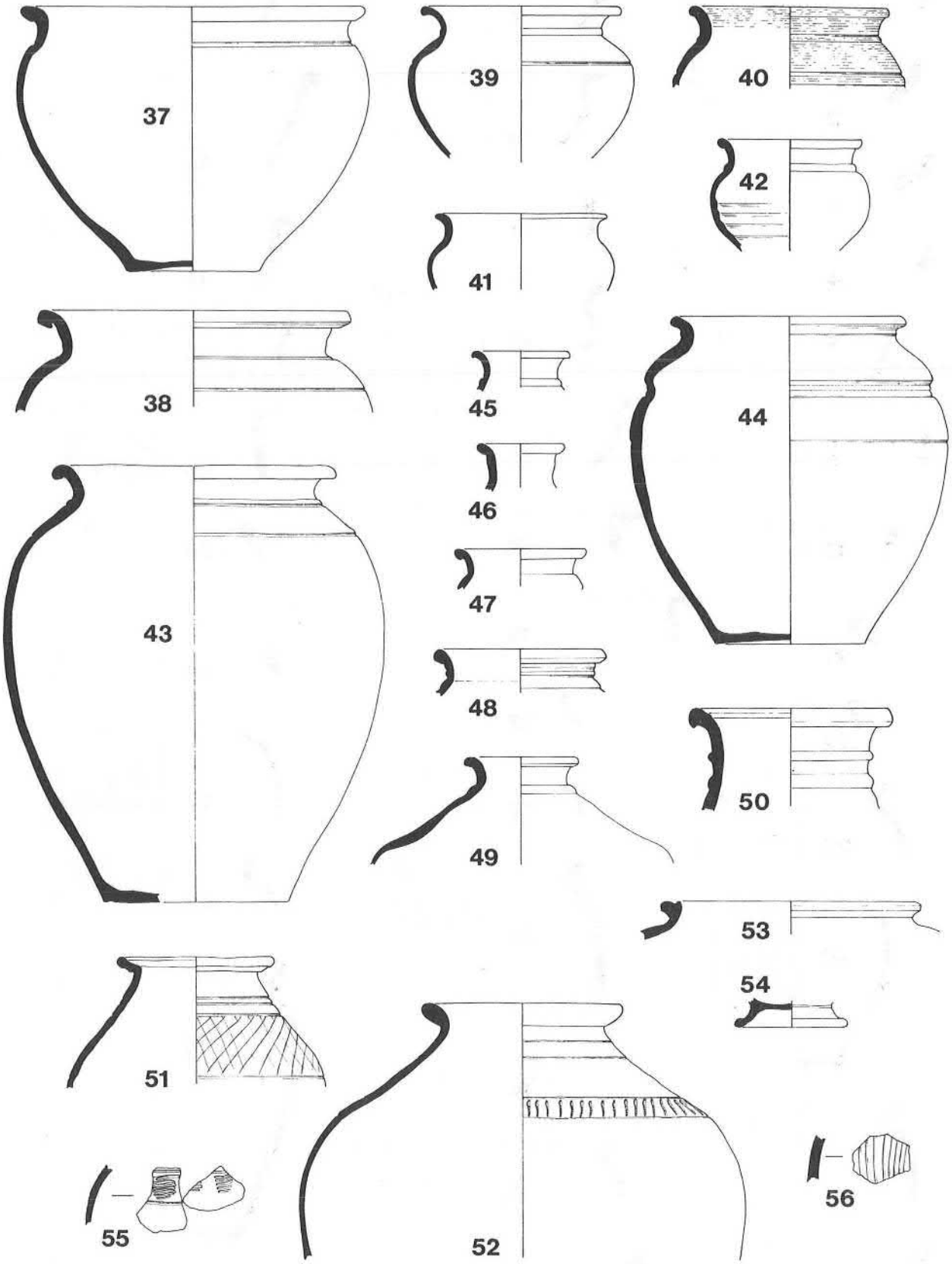

Figure 32: Early Local Sand Tempered Ware, Fabric 47, nos. 37–56, (Scale 1:4).

23. Fabric 47j MK44 L.100, mixed dating, largely late first to late second Cent.

24. Fabric 47ab MK105 (268), first and second Cent.

25. Fabric 47a MK209, unstrat.

26. Fabric 47dg MK44 F186 A (4), mixed dating, predominantly second Cent. Vessel probably early second Cent.

27. Fabric 47ab MK44 F165 B (2)/(3), mid first to mid second Cent. Vessel probably early second Cent.

28. Fabric 47j/dg MK109 (28), early to late first Cent.

29. Fabric 47dg MK45, unprov. Vessel probably early second Cent.

30. Fabric 47c MK105 (281) first and second Cent. Vessel probably early second Cent.

31. Fabric 47dg As no 26 above.

32. Fabric 47dg As No 21 above.

33. Fabric 47dg MK71 F39/40, mid to late first Cent.

34. Fabric 47c MK30 1972, unstrat.

35. Fabric 47dg MK44 F10 F(1)//H(1), mixed dating, predominantly mid first to early second Cent.

36. Fabric 47ab MK105 (619), first to early second Cent.

Fig 32, Fabric 47

37. Fabric 47j MK45 AA T9, predominantly mid to late second Cent.

38. Fabric 47c MK44 F86 A (1), late first to early second Cent.

39. Fabric 47ab MK44 F165 G (1), mid first to mid second Cent.

40. Fabric 47a MK44 F161 A (3), second Cent.

41. Fabric 47dg MK44 L.100, mixed dating, largely late first to late second Cent.

42. Fabric 47a MK44 F89 A(1), predominantly second Cent.

43. Fabric 47ab MK44 F165 B (1), mid first to mid second Cent.

44. Fabric 47dg MK44 F9 G (1), late first to mid second Cent.

45. Fabric 47dg MK44 L.141, mixed dating, largely first and second Cent.

46. Fabric 47j MK44, L.216, second Cent. 47.

47. Fabric 47a MK45, unprov.

48. Fabric 47a MK44 F52 A (1), second Cent.

49. Fabric 47a MK44 F186 B (4), mixed dating, predominantly second Cent.

50. Fabric 47dg MK44 F10 H (1), mixed dating, predominantly mid first to early second Cent.

51. Fabric 47a MK44 F161 A (3), second Cent.

52. Fabric 47c MK45 AC T7, second Cent.

53. Fabric 47k MK44 F165 C (1), mid first to mid second Cent.

54. Fabric 47a MK44 F165 B (1), as no 53 above.

55. Fabric 47a MK45, unprov.

56. Fabric 47a MK45, unprov.

iv Greyware – Conspicuous White Quartz Fig 33,

Fabrics 28a, 28b, 28c, 28d

Examples of all the greywares were sent to Ms Rita Rattray for thin-sectioning, as mentioned in the discussion of sand-tempered fabrics (page 83). These included samples of Fabric 28, which were mixed with the other greywares to aid the objectivity of the results. Interestingly enough Fabric 28 emerged as an almost entirely separate group – Thin-section Group 4. It overlapped with a sub-group of the soft greyware Fabric 25/30 and where the two coincided the group was relabelled Fabric 28/25. All the sherds within this 28/25 division appear to be second-century.

Thin-sectioning suggests that this ware is local and therefore not surprisingly it can sometimes be confused with the other local greyware, Fabric 3. Typical examples of Fabric 28 are distinctive however and it deserves to be considered as a separate entity.

The early forms are not particularly different from those found in Fabric 3/9; for example the mid to late second-century Group 6 from Woughton contained the rim of a straight-sided dog-dish with a thick black slip in Fabric 28a (0.12% of 847 sherds), presumably, like Fabric 3/9, copying BBI (c.f. Fig 12, 34). Group 7, largely late second century in date produced 3.59% out of 195 sherds in Fabric 28/25, composed of a triangular-rimmed dish and the rim of a wide-mouthed jar (Fig 14, 5 and 15), whilst Group 8 produced a similar percentage – 3.22% – with a dog-dish rim and the base of a jar or bowl. The late second to early third-century Group 9 at Wymbush contained a single body sherd.

Fabric 28 may have suffered a slump during the third century, for it is totally absent from Groups 10, 11 and 12. However, once into the fourth century it reappears; in Group 13, dated early to mid fourth-century it equals 3.76% of 133 sherds,

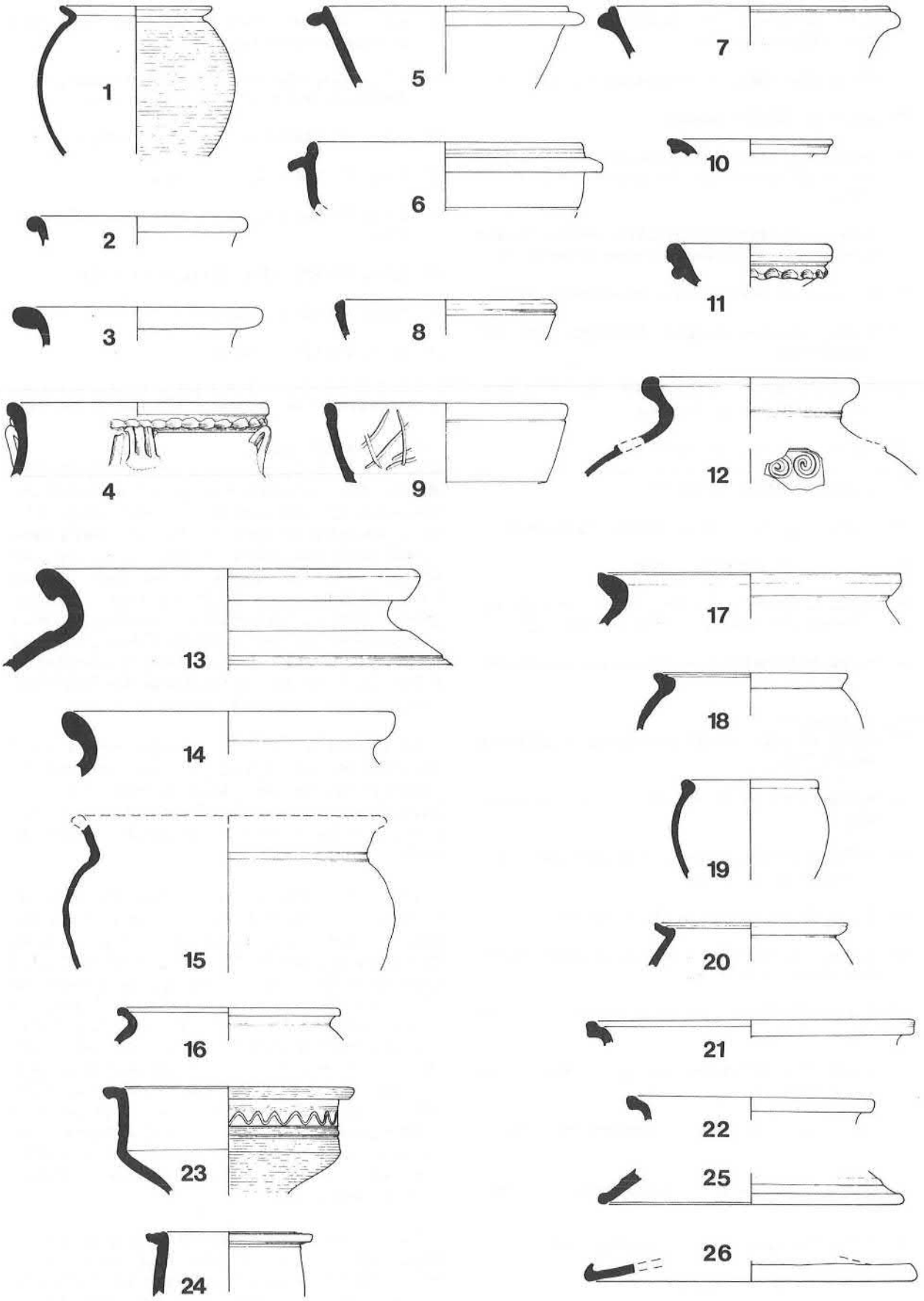

Figure 33: Local Greyware with conspicuous white quartz, Fabric 28, nos. 1–12 and Second Century Sandy Ware, Fabric 43, nos. 13–26, see page 86 (Scale 1:4).

composed only of body sherds, whilst in the mid fourth-century Group 14 and late fourth to early fifth-century Group 17 it is found as wide-mouthed jars or necked bowls (similar to Fig 21, 11, and Fig 23, 20 respectively). Unfortunately, despite the percentage of Fabric 28 (8.69%) within Group 15, none of the pieces were rims or sherds of determinable form.

Ditch L at Bancroft, from the garden area, contained a mixture of pottery, largely fourth century in date but also with a great deal of earlier material. This assemblage included two rims in Fabric 28, one from a flanged bowl, the other from a groove-rimmed dog-dish decorated with burnished scribbles on the inside face (Nos 7 and 9, respectively). The same site also produced an interesting vessel in Fabric 28b; a bowl with frilled rim and decorative handles, No 4. Again this came from a feature with mixed dating, a gully with first to fourth-century material throughout its levels, although this particular sherd came from the uppermost layer (MK105 224).

Bradwell Abbey Barn MK63 (Niblett 1974, 483) and Holne Chase MK45 (RMK 1987, 30) both produced vessels in this fabric. On the former site a gully, dated late second to late third century, contained a flanged bowl, No 5, in a more standard style than that found in Ditch L at Bancroft, whilst Ditch T7 at Holne Chase produced a spherical jar with a highly burnished exterior face, No 1. Ditch T7 is largely second century in date, but did contain later elements. The remaining rims in this fabric came from the topsoil and destruction rubble at Bancroft and Stantonbury. They include another groove-rimmed dog-dish, No 8, a rounded flanged bowl, No 6, two wide-mouthed jars or bowls with everted rims, Nos 2 and 3, and a narrow-necked jar or jug with frilled decoration, No 11. It probably needs no stressing that these frilled vessels and oddly shaped flanged bowls are exceptional, especially when compared to those forms being manufactured by other local greyware potteries. It may be that the Fabric 28 potters ceased imitating the plainer BB1 forms and instead began to copy the repertoire of an alternative industry. The flanged bowls for example resemble vessels from the late fourth-century rubbish deposit at The Park in Lincoln (Darling 1977, Fig 3, 43–50). The frill-decorated jars also resemble some Lincoln and Oxford reduced ware vessels (*op.cit.* Fig 3, 54–55 and Young 1977, Fig 74, R9-R10 respectively). One of the Oxford body sherds has burnished scroll decoration, as on the jar/jug in Fabric 28c (Fig 33, 12). This same decoration is seen in the Phase 4b pottery at Towcester, dated approx. 355–370+AD (Brown and Woodfield 1983, Fig 30, 241).

The differences in vessel form between the local greyware fabrics must be accounted for either by fashion or date. Date may not be the correct explanation as Fabrics 28 and 3/9 are found together in later features, although the latter was not as common in the fourth century as it had been in the second and third. It may be that this slump was caused by the success of Fabric 28 or that Fabric 28 became successful because of the slump. However, because the two do occur together the differences in form must be due purely to fashion.

In the fourth century the fashion was towards more highly decorated vessels, and Fabric 28 with its slips, linear burnishing, scrolls and frills was presumably exploiting this trend. Unfortunately, until such decorated ware is found in securely dated contexts rather than topsoil or destruction rubble as now, such a statement is still only a hypothesis. Further work must be done on greater quantities of late material before a positive date can be put on these pieces. All that can be done is to note the unusual forms and fabric and hope that eventually its date and relationship with other greywares will be more clearly understood.

The illustrations show the range of vessel types. The dates given refer to contexts, unless otherwise stated.

Fig 33, 1–12

1. Fabric 28a MK45 AA T7, second Cent.
2. Fabric 28a MK301 S1 F114, second to fourth Cent.
3. Fabric 28b MK301 S1 (1), disturbed second Cent. soil level.
4. Fabric 28b MK105 (224), fourth Cent.
5. Fabric 28b MK63 C4, late third to fourth Cent.
6. Fabric 28d MK301 S1 F128, second to fourth Cent.
7. Fabric 28b MK105 destruction rubble, vessel probably fourth Cent.
8. Fabric 28a MK105 (188), predominantly fourth with much residual.
9. Fabric 28b As 8 above.
10. Fabric 28c MK105 (463), topsoil.
11. Fabric 28b MK301/73, destruction rubble, vessel probably fourth Cent.
12. Fabric 28c MK301 S1 F141, second to fourth Cent.

Thin Section Analysis Report

The Sand Tempered Wares by Rita Rattray

I have placed all the sand-tempered fabrics in 16 groups, largely on the basis of the size and proportions of the major inclusions. The groups may now relate to the typological groups of the grey wares.

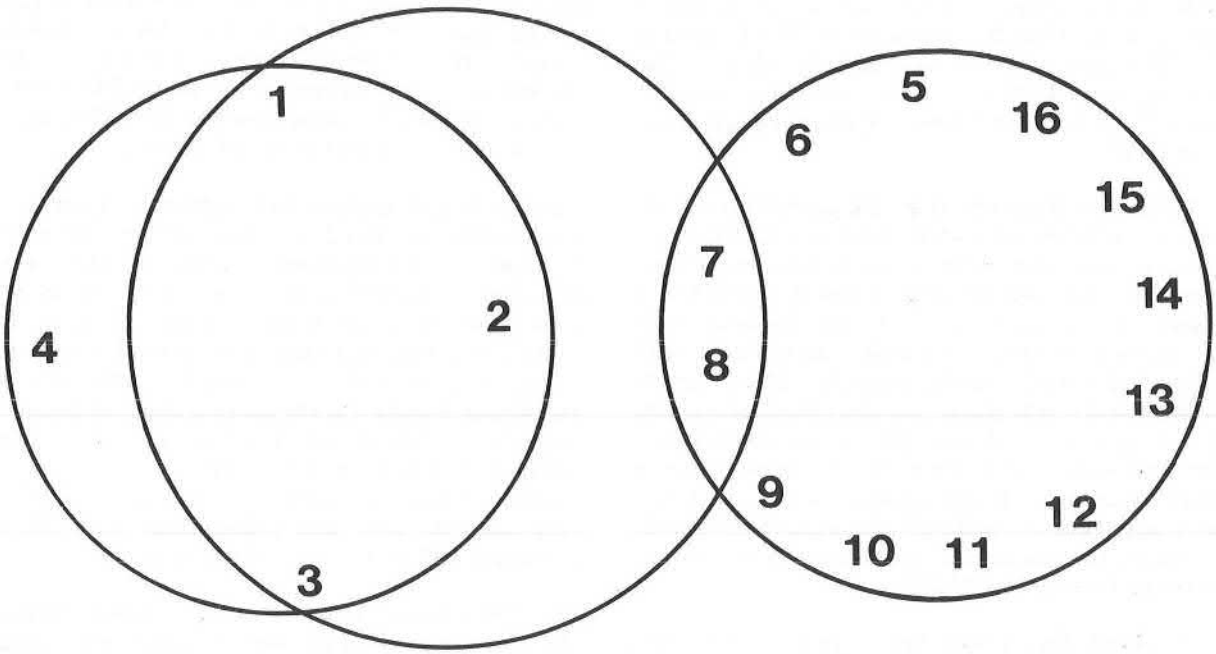

TABLE 2: To show the relationships between the grey/black ware thin section groups as discerned by analysis. Note the relative isolation of Group 4.

Set A (1, 2, 3, 4).
Set B (5, 6, 7, 8, 9, 10, 11, 12, 13, 14, 15, 16).

It may also be possible to relate differences in composition, for example, Groups 1–4 and 5–16, to types of vessels occurring in these groups.

As regards the sources of the clays and sands, I think that the groups can be further reduced. (These have been simplified into sets, see Table 2. Eds.) Groups within the same sets may come from areas with similar geology and may be close together. However, since the major inclusions (quartz, phosphates, flint, sandstone, ferruginous sandstone, mica, limestone, iron and clay pellets) do not have limited geological distribution, it is not easy to pin-point specific areas for sources. The thin sections do suggest that the clays and sands used are local and not imported.

The clays used may be the Kellaway Beds which consist of fine-grained argillaceous sands, silts and mudstones, but the Kellaway Beds resemble the Oxford Clay and can sometimes be confused. Oxford Clay seems a more likely clay source; Middle Oxford Clay consists of calcereous mudstones and Upper Oxford Clay consists of slightly calcareous mudstones with thin calcareous siltstone bands as revealed in clay pits at Loughton (Horton, Shepherd-Thorn and Thurrell 1974, 28). These descriptions may be compared with the matrixes of the fabrics in groups 1–3 and 7 and 8. Oxford Clay is abundant; in addition, Upper Oxford Clay is present beneath the Woburn Sands on the Lower Greensand.

The presence of phosphates, glauconite (groups 9 and 13), iron staining, ferruginous sandstone, and ironstone suggest that a likely source for the sand filler would be the Woburn Sands. The Woburn Sands comprise pale buff to yellowish brown, fine to medium-grained, sometimes glauconitic quartz sand. Very commonly the sands have been variably stained and sporadically cemented by iron oxides to form rusty brown-coloured rock types, ranging from soft friable sandrock, through ferruginised flaggy sandstone to hard sandy ironstone. (Horton, Shepherd-Thorn and Thurrell 1974, 35). Phosphatic nodules are also associated with the Lower Greensand – the highest beds consist of 'monotonous sequences of fine to medium grained sand and sandrock, sandstone and ferruginous sandstone' which may be the source of the sand in Groups 5 onwards. Areas of particular interest are in the south east around Little Brickhill and Great Brickhill. Ironstone and flint may come from the Ouzel Terrace Gravels, which derive from the Woburn Sands and the older Head, where the solid formation is Oxford Clay (Horton, Shepherd-Thorn and Thurrell 1974, 53). The First Terrace Gravels northwest of Caldecotte consist of pebbly, clayey sand, the surface soil being loam scattered with flint gravel. This may be the origin of the angular flint in the kiln bar from Caldecotte.

Extensive deposits of Head occur in the Ouzel Valley. Sandy Head covers the Oxford Clay at Bow Brickhill, Little Brickhill and Great Brickhill. The

upper deposit is normally medium sand containing sandstone and ferruginous sandstone from the Woburn Sands.

Angular flint in the fabrics may come from Chalky Boulder Clay, which occurs at Little Brickhill and Great Brickhill. South of Bow Brickhill Heath, there is mention of clayey flinty drift derived from Chalky Boulder Clay. This may be a source of clay rather than Oxford Clay – with adequate preparation Boulder Clay could be a suitable potting clay, particularly if tempered with nearby sands.

To conclude, it seems likely that the clays used were either Oxford Clays or Boulder Clays tempered in differing quantities with sands from, or derived from, the Lower Greensand. Regions of particular interest would seem to be on or near the Woburn Sands.

The isotropic matrices of all the sherds in thin-section indicate that they were fired at temperatures above 700°C.

In the medieval sherds, the source of groups 9 and 12 may be in close proximity, but groups 7–10 do seem to contain more rounded grains. The Roman sherds from Caldecotte are more consistent (group 8). The kiln bar from Caldecotte, in which local materials from the immediate surroundings may be assumed to have been used, contains ill-sorted sub-angular and sub-rounded quartz, iron ore, angular flint, phosphatic lenses, glauconite, sandstone, mica and grog. The abundant flint and fine clay matrix would suggest the use of First Terrace Gravels.

Thin section groups for the sand tempered wares

Group 1
Soft, soapy fabric with smooth fracture. Sparse, fine, sub-angular quartz, (0.2m), sparse ferruginous sandstone, mica (muscovite), fine rounded black iron ore and iron staining in a well-sorted, abundant, very fine sub-angular silt matrix (0.04–0.08mm). (Fabric 25/30).

Group 2
Ill-sorted, occasional medium sub-angular quartz (0.4mm), sparse shell, occasional subrounded quartz in a matrix of fine, angular quartz with common, fine black iron ore (9j).

Group 3
Occasional/common medium/coarse sub-angular quartz (0.2–0.5mm), abundant muscovite mica, iron, occasional angular flint, organic matter in a very fine abundant sub-angular quartz matrix, and occasional glauconite (3k, 9f and 25/30).

Group 4
Ill-sorted occasional medium sub-angular quartz largely white (0.54mm), organic matter, muscovite mica, sparse fine phosphate, rounded black iron ore, metamorphic quartz, sandstone, plagioclase feldspar and ironstone in a clay matrix.
(28a, 28b, 28c, 28d).

Group 5
Common/abundant, fine, sub-angular quartz (0.2mm). Occasional medium rounded ill-sorted quartz, clay pellet, ferruginous sandstone, muscovite mica in a matrix of very fine sub-angular quartz (0.06–0.1mm). (9g/12 and 9f).

Group 6
Ill-sorted, occasional medium sub-angular quartz (0.4mm), common, ill-sorted large clay pellets up to 2mm, occasional iron, sparse phosphate in fine clay matrix (47c).

Group 7
Ill-sorted, fine, subangular quartz (0.1–0.2mm) occasional coarse sub-angular and sub-rounded quartz (0.6mm), flint up to 2.6mm, muscovite mica, iron and iron staining, metamorphic quartz and common calcareous inclusions in a clay matrix (47a)

Group 8
Ill-sorted, common, sub-rounded quartz (0.2–0.4mm), muscovite mica, occasional grog, limestone, common clay pellets, red iron ore, occasional microfossil in vesicular fabric with variegated clay matrix (47ab, 47c, 47dg, 47k, 3g/j, 46qr).

Group 9
Ill-sorted, abundant fine-medium-coarse sub-rounded quartz (0.2–0.6mm), rounded iron ore (0.2–0.4mm), iron lenses, occasional flint (1.4mm) and clay pellets ina fine clay matrix. (Close to Group 8). Occasional glauconite. (32b, 47c).

Group 10
Sparse to common coarse sub-rounded quartz, occasional ferruginous sandstone (1.00mm). Flint, iron, rounded metamorphic quartz - (recrystallised sands), limestone/dolomite and muscovite mica in very fine clay matrix (32a).

Group 11
Common to abundant fine to medium sub-angular quartz (0.3–0.4mm), occasional organic matter, ferruginous sandstone, muscovite mica and rounded iron in a homogenous fine clay matrix (3a, 9a).

Group 12
Well-sorted common to abundant, medium to coarse sub-angular quartz (0.3–0.5mm) (macroscopically pink and white), sandstone, iron ore, organic matter, muscovite mica, clay pellets, occasional ill-sorted rounded quartz, occasional flint, phosphate and limestone, in a clay matrix, with occasional glauconite (3a, 3c, 9a, 9b, 19/29).

Group 13
Ill-sorted, common to abundant fine to medium sub-angular quartz (0.1–0.3mm), occasional clay pellets, sandstone, grog, iron, occasional large sub-rounded quartz (0.7mm), occasional metamorphic quartz, flint and occasional phosphate in a clay matrix (3a, 3b, 3c, 3n, 9a, 9xy, 9e/14, 47j).

Group 14
Ill-sorted, abundant, fine sub-angular quartz (0.1–0.2mm), occasional plagioclase feldspar, coarse sandstone, occasional flint (up to 2.6mm) occasional coarse sub-angular quartz (0.6mm), iron, ironstone and occasional limestone and mica in clay matrix, with ill-sorted clay pellets (47c, 47d/g, 3g/j, 47ab, 47j).

Group 15
Well-sorted, abundant, fine to medium sub-angular quartz (0.2mm), sandstone, clay pellets, iron ore, occasional rounded quartz (0.36mm), occasional ferruginous sandstone, abundant metamorphic quartz in a clay matrix (related to 12 and very similar to 13). Occasional plagioclase feldspar (3a, 3c, 9a, 9e/14).

Group 16
Well-sorted, abundant medium sub-angular quartz (0.3mm), occasional flint and sandstone, common iron ore, muscovite mica, metamorphic quartz (0.2mm), in a matrix of fine angular quartz (0.06–0.14mm) (3f).

v Second-Century Sandywares Fig 33

Fabrics 43ae, 43cb, 43d, 43f and 43g
At Towcester the second-century sandy fabrics are described as having brownish grey (Brown and Alexander 1982, 36) or light pinkish buff surfaces (Brown and Woodfield 1983, 87) normally with black exteriors. They largely occur as lid-seated and everted-rim jars. Such traits are also characteristic of the Milton Keynes Fabric 43 vessels; it appears probable that the two may be related or perhaps share a common source.

The exterior blackening on most of the Milton Keynes sherds and virtually all the Towcester material suggest that the vessels were used for cooking. Presumably the compact densely sanded fabrics of all but 43d had good heat resistant qualities; Lyne and Jefferies (1979, 18) note that a heavily sanded vessel had a better chance of surviving temperature fluctuation in a kiln and would also last longer when exposed to variable heat levels during use.

Fabric 43 was first recognised at the Stantonbury site where it occurred in fairly large quantities, mostly unstratified. Even from one small area of topsoil 2.91% was in Fabric 43 out of 343 sherds. The vessels are all wide-mouthed necked everted-rim and lid-seated jars. Usually, however, Fabric 43 is recovered from dateable deposits.

Fabric 43 is predominantly an early second-century fabric, although it was first seen in the mid to late first-century pit, Group 2 at Cotton Valley. It made up 3.37% of 475 sherds, composed of a rilled lid-seated jar in 43f (Fig 6, 15) and the base of another vessel, also in a buff sandy 43f. The latter shows clear internal throwing ridges. It might be supposed that the lid-seated jar is part of the tradition so prevalent in shell-tempered ware at this period.

The late first to early second-century ditch assemblage, Group 3, produced 7.1% of 831 sherds in Fabric 43. Again these are lid-seated and necked jars in 43f (Fig 8, 15 and 22) but there is also a fragment of a platter or lid in 43g (Fig 8, 21). The percentage is large but reflects the presence of some virtually whole vessels.

As a contrast the late first to mid second-century ditch Group 4 at Loughton contained but a single rim and has two body sherds, 0.59% of 511 pieces. The rim is only small (Fig 9, 21) but appears to be at that of a wide-mouthed jar, much like a vessel (Fig 8, 22) from the previous group.

Small percentages were also produced from Groups 5 and 6, 0.26% and 0.47% respectively. The former is composed of a narrow-necked jar or flask rim (Fig 10, 17), whilst the latter contained only body sherds in this fabric; such a lack reflects the essentially early second-century nature of the ware. The pieces in Groups 10 and 17 are almost certainly residual.

Wood Corner MK64 produced four vessels in this ware, two of which were stratified in second-century gullies. The lid-seated vessel in Fabric 43f, No 19, came from the lower silt of the gully related to the central hut whilst the small neckless jar in a burnt cream sandy 43f or 43ae, No 20, was found in the gully to the west of the main hut. The two unstratified vessels include a reeded-rim bowl in Fabric 43f, No 24 and a wide-mouthed jar or bowl in 43g, No 15. This vessel is creamy-white in colouring and unburnt and could perhaps be placed within the Fabric 18 whiteware category, but the large inclusions visible amidst the fine sand tempering suggest a closer relationship with Fabric 43.

A necked lid-seated jar, No 22, and a storage jar, No 13, both in Fabric 43c were recovered from a second-century feature at Little Woolstone MK109/44. Lid-seated jars were also found at the Bradwell Abbey Barn site and Stantonbury, Nos 17 and 18 . Holne Chase and Caldecotte produced lids, both in Fabric 43f, Nos 25 and 26.

With the exception of the lids, the forms of Fabric 43 vessels are similar to those of shell-tempered ware. Both functioned largely as cooking-pots and, less frequently, as storage jars. This direct competition with a large industry may have been one of the main reasons for the short life of the ware, spanning as it did about 75 years, approximately from the late first century to the middle years of the second century.

The illustrations show the range of vessel types. The dates given refer to contexts unless otherwise stated.

Fig 33, 13–26

13. Fabric 43c MK109 F12 (44), largely first Cent. to the third-quarter second Cent.

14. Fabric 43a MK301 S1 X, topsoil.

15. Fabric 43g MK64 'farmyard spread' although pieces of this vessel were also found within a post-hole in F2, mid to late second Cent.

16. Fabric 43f MK301 S1 (1), disturbed second Cent. soil level.

17. Fabric 43ae As no 16 above.

18. Fabric 43ae MK63, unstrat.

19. Fabric 43f MK64 F15, late second to early third Cent. with earlier material.

20. Fabric 43f/ae MK64 F15 (primary silt), as no 19 above.

21. Fabric 43ae MK301 S1 (1), disturbed second Cent. soil level.

22. Fabric 43c MK109 F12 (44), largely first Cent. to the third-quarter second Cent.

23. Fabric 43ae MK44 F186 A (4), mixed dating, predominantly second Cent.

24. Fabric 43f MK64, unstrat.

25. Fabric 43f MK44 F186 A (3), mixed dating, predominantly second Cent.

26. Fabric 43f MK45, unstrat.

vi Grogged Shelly Ware Fig 34.

Fabric 45

Thompson (1982, 16) noted the presence of this fabric in her Northwest Zone 8, from about Bletchley to Northampton. This zone was characterised during the late Iron Age/Belgic period by three tempering methods: grog (Fabric 46), shell (Fabric 1) and mixed grog- and-shell (Fabric 45). It was initially tempting to see Fabric 45 as intermediate between the more native Iron Age shelly wares and typical Belgic grogged material but this is not supported by vessel form or colour. The forms themselves cover a wide date range whilst the oxidised surfaces of the pots are a late phenomena generally indicating a conquest date or after (Thompson pers.comm). This being the case it appears that both handmade and wheelmade vessels in Fabric 45 were produced at the same time, simultaneously with similar vessels in Fabric 46 and lid-seated jars in Fabric 1.

Fabric 45 may simply be the result of geology and perhaps differing kiln firing temperatures. The clays used could have originated from the more fossiliferous beds in the north-west of the city whilst a kiln temperature lower than 600 oC would not have burnt out the carbonate content. Thin-section analysis and experimental firing of clays from the river terrace at Caldecotte proved the clays there to contain only small amounts of fossil shell with some fine limestone fragments which burnt out at temperatures exceeding 600°C Surprisingly, both handmade and wheelmade vessels in Fabric 45 were found at Caldecotte, although in small numbers (publication in preparation by Milton Keynes Archaeology Unit).

Larger concentrations of Fabric 45 have been found in the north and middle of the city. At Bancroft in the north-west area, Group 3, dated late first to early second entury, produced 5.05% in this ware, composed of three lid-seated jars (Fig 7, 13 and 14, and one vessel not illustrated) whilst the Loughton Group 4 in the middle area of the city contained 4.5%, composed of a wide-mouthed jar or bowl and a lid-seated jar (Fig 9, 13 and 2). The pieces found in Groups 6 and 10 are believed to be residual.

The scarcity of Fabric 45 around the city stresses how minor a fabric it is, for in proving not to be the passage-fabric between shell-tempered and grogged ware it may be regarded simply as a coarser variation of the latter.

The illustrations the range of vessel types. Dates given refer to contexts, unless otherwise stated.

Fig 34, 1–5

1. MK44 F10 (1), mixed dating, predominantly mid first to early second Cent.

2. M109, unstrat.

3. MK44 F165 A (1), mid first to mid second Cent.

4. MK121, unstrat.

5. No 1 above.? Lid or bowl.

vii Belgic Grogged Wares and Later Subgroups (Figs 34–37)

Fabrics 46a, 46da, 46g, 46j, 46k, 46m, 46n, 46p and 46qr

The term 'Belgic' is used only to denote a distinctive class of pottery; it has no political, economic or historical implications (Thompson 1982, 5). The characteristic Belgic fabric, in its central area of distribution, is grog-tempered; that is, grains of crushed pottery were added to the clay as a filler to provide elasticity and help prevent collapse in firing. Later subgroups in this area have both grog and sand for temper. A local version of this fabric was produced at Caldecotte Kiln I, see page 95.

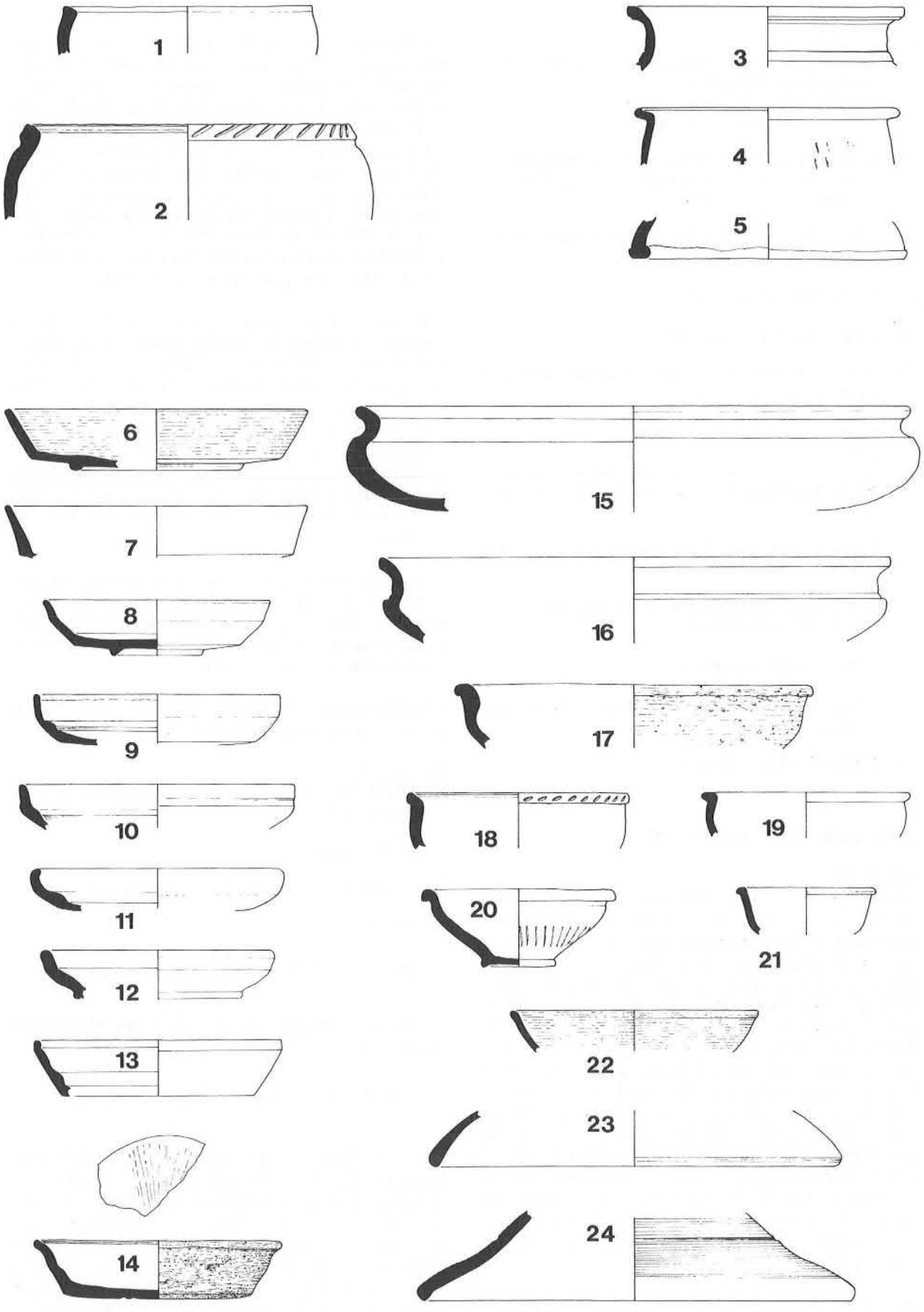

Figure 34: Local Grogged Shelly Ware, Fabric 45, nos. 1–5, Local Belgic Grogged, Fabric 46, nos. 6–24, (Scale 1:4).

The heartland of English Belgic pottery lies in Hertfordshire and Essex. In Hertfordshire, sites in the Puckeridge-Braughing area (Partridge 1981) were receiving fine imported Gallo-Belgic pottery as early as c. 20 BC and it is from these and their like that many of the vessel forms in the native Belgic grogged fabric were copied. Considering the proximity of the Hertfordshire sites to Milton Keynes (c. 56 kilometres) it is somewhat surprising to find that only negligable quantities of Gallo-Belgic imports reached this area.

The Chiltern Hills, whose escarpment separates the counties of Buckinghamshire and Bedfordshire from Hertfordshire, must partly account for this cultural poverty. Indeed where river valleys are seen to connect the counties, for example the Ivel River system on which lie Sandy and Shefford in Bedfordshire and Hitchin in Hertfordshire, the impact of Belgic-style Catuvellauni influence is clearly seen in the pottery, coins and other objects (Johnston 1974, 37).

The impact of Belgic-style Catuvellaunian influence is not obvious in this region until the first century AD, despite the discovery of coins of Tasciovanus, probably dating to the first quarter of the first century BC., as surface finds at Sherwood Drive MK100 and Bancroft.

In c. 10 AD Cunobelin captured Camulodunum, the Trinovantian capital and it was around this date, the crystallising of Catuvellaunian strength (Simco 1973, 14), that Belgic cultural influence may have advanced into this area and the Bedford region.

Settlements such as Saffron Gardens may have come into being soon after this date (Waugh *et al* 1974). Despite closer contact this area would still have been isolated from the tribal heartland and the different vessel forms that evolved in the North Bucks/South Northants region may be the result. At Saffron Gardens there were no high pedestal bases, and no jars with grooves on the body and butt-beakers were not very common; these are all forms common in Hertfordshire (Waugh *et al* 1974, 375). Instead there are the large hollow-cordoned girth-beakers so typical of this northern zone. The authors suggested that these differences might relate to a Belgic group of separate origin which came in from the Wash area, travelling south-west, and this agreed with the earlier views of D.F. Allen in his study of Belgic coinage, but since then he has rejected this idea of successive waves of immigration (Allen 1976, 207).

Later, with the arrival of the Roman army and the construction of the Watling Street, straight through from Hertfordshire, there appears to have been a second wave of Belgic culture typical of that found in the Catuvellaunian heartland. Vivien Swan, in her discussion on Oare in N. Wilts (Swan 1975, 45) believes that it was the military markets which encouraged Essex and Hertfordshire potters to migrate; a situation seen here in the Caldecotte kiln, dated to the conquest period and probably serving a military station established on the site of the later fort of Magiovinium (Woodfield 1977a, 384). Peacock (1982, 150) agrees that such extramural kilns were the work of civilian camp followers and he suggests that they were possibly encouraged and given facilities by the *praefectus fabrum* (Sander 1962).

The Caldecotte kiln material, unlike that at Saffron Gardens, compares closely with many Hertfordshire forms; for example the B3–6, the cordoned necked jar with a flattened profile (Fig 38, 22), which is found commonly in Bucks and on sites in Hertfordshire such as Braughing, Welwyn and Hitchin; the G1–3, a platter unusual for its large size (Fig 38, 26) but fairly common in smaller sizes in Herts; and the G5–2, the butt-beaker (Fig 38, 12–18)whose form is very similar to those at Prae Wood in Hertfordshire (Thompson 1982, 652).

It is interesting to note that one of the large storage jars (Fig 38,2) from the Caldecotte kiln was undoubtedly made by the same potter who made No. 50 Fig 6 at Saffron Gardens (Thompson 1982, 652). The latter site ended perhaps about the middle of the first century AD at a moment when some improvements in techniques had been introduced (Waugh *et al* 1974, 375) and perhaps after one or two of the Saffron Gardens potters had worked temporarily with the potters at Caldecotte.

At Walton (RMK 30), a site with the same date range as Saffron Gardens and with similar forms (with the exception of hollow cordoned beakers see, Group 1, Fig 5), the percentage of Belgic grogged material reached 95.13% out of 226 sherds. This high percentage may be due to the proximity of the Caldecotte Kiln I (although this is doubtful, owing to the different vessel forms) or else this was itself the site of a kiln which was missed owing to the difficult conditions of the rescue excavation, or perhaps more probably lay to one side of the available area.

Pit 1 at Sherwood Drive MK100 (RMK, 39) produced 82.75% of 87 sherds in typical Belgic grogged ware and this includes one extremely large shallow bowl, No 15, the base of which was unfortunately missing. The group dates to the conquest period.

Group 2, from the mid to late first-century pit at Cotton Valley MK71 produced 40.21% in Fabric 46 out of 476 sherds. This percentage was composed of subgroups a, da, k, m and p. It contained twenty-four Fabric 46 vessels, consisting of four

storage jars, one lid-seated jar, two platters, three cups, twelve wide and narrow-mouthed bowls or jars and two miniature butt-beakers (Figs 6 and 7). It is worth noting that the vessels apparently used for cooking were in Fabric 1, not 46, and were always lid-seated jars. At this date Fabric 46 appears to have had a monopoly of necked jars and other more varied forms.

Group 3 from MK345 at Bancroft, dated late first to early second century, produced 12.15% in Fabric 46 out of 831 sherds. Subgroups 46j, and p were present with some oxidized 46a and a (? residual) handmade vessel in 46da (Fig 7, 1). The group also included some mixed grog and shell (Fabric 45) lid-seated vessels.

Within Group 4, dated late first to mid second century, the majority of the large Fabric 46 percentage (19.76%) is composed of later sub-group material, with only 7.24% of that percentage being in Fabric 46a. In Group 5 from Caldecotte, dating from the early second to the third quarter of the second century, the Fabric 46 percentage of 8.07% was composed almost entirely of body sherds in the later subgroups with just two rim fragments in 46da and 46a, Fig 10, 1 and 14.

Grog-tempered Belgic pottery has a long survival period in Bucks, a fact illustrated at Thornborough (Thompson 1982, 843). This is especially true of the heavier storage jars; in the fill of the Magiovinium Elm Tree ditch, dated early second century, these sherds equalled 16% of the total whereas the finer material was not represented at all (Woodfield 1977a, 384–399). Residual pieces were found in many of the later Milton Keynes groups, from Group 6 onwards. In Group 6, dated mid to late second century only a token 0.83% was found, out of 847 sherds. It is surprising that it contained so little grogged material considering the proximity of the earlier 'Belgic' settlement, but this may only be indicative of the speed with which the pit was filled. Both Groups 7 and 10 produced several residual Fabric 46 sherds despite their late dates (late second and late second to mid third respectively) whilst at Bancroft it formed 9.20% out of 1289 sherds from a rubble area. In contrast, at Stantonbury, a rubble area produced only 2.41% out of 343 pieces. The large percentage from the Bancroft rubble implies a strong 'Belgic' presence on that site some four centuries earlier, whereas at Stantonbury the low percentage only suggests a presence within the area. On excavation this has proved to be true; at Bancroft a large number of Belgic ditches were found whilst Stantonbury had only a single shallow gully. A site such as Wymbush which produced no Belgic grogged material (with the exception of five pieces in the later 46j) was presumably established on previously unsettled and unworked land.

Another interesting facet to Fabric 46 is the possibility that it was a fore-runner of the grogged/clay-pelleted Fabric 2. Thin-sectioning (see report page 67) has shown that similar clays were used and indeed there is great similarity between 46j (the latest 46) and 2b (the earliest 2). The most common vessel form in Fabric 2 is a wide-mouthed necked bowl with a thin neck cordon, the predecessor of which is the Belgic D1–1 type (Thompson 1982, 299); this is however a fairly ubiquitous form throughout the Roman period.

In view of the fact that grog-tempering could produce such an elastic and flexible clay (Thompson 1982, 4) the differences in the range of forms and finish obtained by the Fabric 46 and Fabric 2 potters is remarkable. Such differences may have been intentional (if for example the vessels were needed simply as containers rather than tableware) or may indicate the loss of technical skill. Whatever the reason it was regressive, for the repertoire of forms available to the 'Belgic' potter was wide, extremely handsome and infinitely superior to the standardized procession of pottery in soft, powdery Fabric 2 that was to follow.

The illustrations show the range of vessel types. Dates given refer to contexts, unless otherwise stated.

Fig 34, Fabric 46, 6–24

6. Fabric 46p Mk44 (398), mid to late first Cent.
7. Fabric 46m MK44 F10 D (3), mixed dating, predominantly mid first to early second Cent.
8. Fabric 46a MK71 F29, first Cent.
9. Fabric 46p MK44 F10 H (1), as No 7 above.
10. Fabric 46m M71 (+), topsoil, fabric suggests vessel dates to c. mid first Cent.
11. Fabric 46a MK44 L.141, mixed dating, largely first and second Cent.
12. Fabric 46qr MK44 F165 B (1), mid first to mid second Cent.
13. Fabric 46n MK71 (''), topsoil.
14. Fabric 46a MK44 F10 F (1), as No 7 above. Handmade.
15. Fabric 46a M100 P1, first Cent.
16. Fabric 46m MK44 F27 C (1), first and second Cent (fabric suggests vessel is c. mid first Cent).
17. Fabric 46a MK301/90, first and second Cent. (from primary silt). handmade.
18. Fabric 46m MK44 L.120, heavily mixed layer, first to second Cent. and medieval (Fabric suggests vessel is c. mid first Cent.)

19. Fabric 46a MK71 E6 (68), first Cent.

20. Fabric 46qr MK44 F165 D (1), mid first to mid second Cent.

21. Fabric 46k MK44 F52 A (1), second Cent.

22. Fabric 46p MK44 F10 (1), as No 7 above (bowl or lid?)

23. Fabric 46p MK44 F165 E (1), mid first to mid second Cent.

24. Fabric 46g MK44 L.196, largely mid to late first Cent. with medieval contamination.

Fig 35 Fabric 46 continued.

25. Fabric 46a MK44 L.223 first Cent., handmade.

26. Fabric 46qr MK44 F10 C (3), as No 7 above.

27. Fabric 46qr MK44 F10 F (1), as above.

28. Fabric 46a MK44 F10 B (1), as above.

29. Fabric 46p MK44 F10 F (1), as above.

30. Fabric 46qr MK44 F186 A (3), mixed dating, predominantly second Cent.

31. Fabric 46p MK44 F186 C (3), as above.

32. As above

33. Fabric 46a As above, residual.

34. Fabric 46p MK44 F10 (1), as No 7 above.

35. Fabric 46a MK105 (622), largely first to early second Cent.

36. Fabric 46a MK105 (619), as above.

37. Fabric 46a MK105 (455), topsoil over Building 2.

38. Fabric 46p MK44 L.163, predominantly first with some second Cent.

39. Fabric 46qr MK44 F10 (2), as No 7 above.

40. As above

41. Fabric 46p MK44 F10 F (1), as No 7 above.

42. Fabric 46m MK100 P1, first Cent. (fabric suggests vessel is c. mid first cent).

43. Fabric 46a MK44 L.100, first Cent.

44. Fabric 46p MK71 F39/40 mid to late first Cent.

45. Fabric 46m MK44 F186 C (3), mixed dating, predominantly second Cent. (the fabric of this vessel suggests. mid first Cent.).

46. Fabric 46a MK105 (382) topsoil.

47. Fabric 46p MK44 F10 F (1), as No 7 above.

48. As above.

49. Fabric 46a As above.

50. Fabric 46qr MK44 F10 H (1), as No 7 above.

51. Fabric 46m MK44 F143 (1), c. mid first Cent.

Fig 36, Fabric 46 continued.

52. Fabric 46a MK44 F10 (1), mixed dating, predominantly mid first to early second Cent.

53. Fabric 46p As above.

54. As above.

55. As above.

56. Fabric 46n MK44 F165 C (1), mid first to mid second Cent.

57. Fabric 46m MK44 L.163, predominantly first with some second Cent. (fabric suggests c. mid first Cent.).

58. Fabric 46qr MK44 F114 A (1), second Cent.

59. Fabric 46a MK100 P1, first Cent.

60. Fabric 46p MK44 F10 H (1), as No 52 above.

61. Fabric 46qr MK44 F10 (1), as above.

62. Fabric 46qr MK44 F10 F (1), as above.

63. Fabric 46qr MK44 F165 C (1), mid first to mid second Cent.

64. Fabric 46p MK44 F10 C (1), as No 52 above.

65. Fabric 46a MK100 D2, residual in mid/late second to late third/early fourth Cent. ditch.

66. Fabric 46a MK44 (357), first to early second Cent.

67. As no 65 above

68. Fabric 46m MK44 F109 B (2), very mixed feature, first to second Cent.

69. Fabric 46p MK71 F39/40, mid to late first Cent.

70. Fabric 46? MK44 L.163, predominantly first with some second Cent.

71. Fabric 46m MK (+), topsoil (fab early second Cent.

73. Fabric 46p MK44 F10 F (1), as No 52 above.

74. Fabric 46m MK44 F143 A (1), c. mid first Cent.

75. Fabric 46m MK44 (390), c. mid first Cent.

76. As No 74 above.

77. As No 65 above.

78. As No. 74 above.

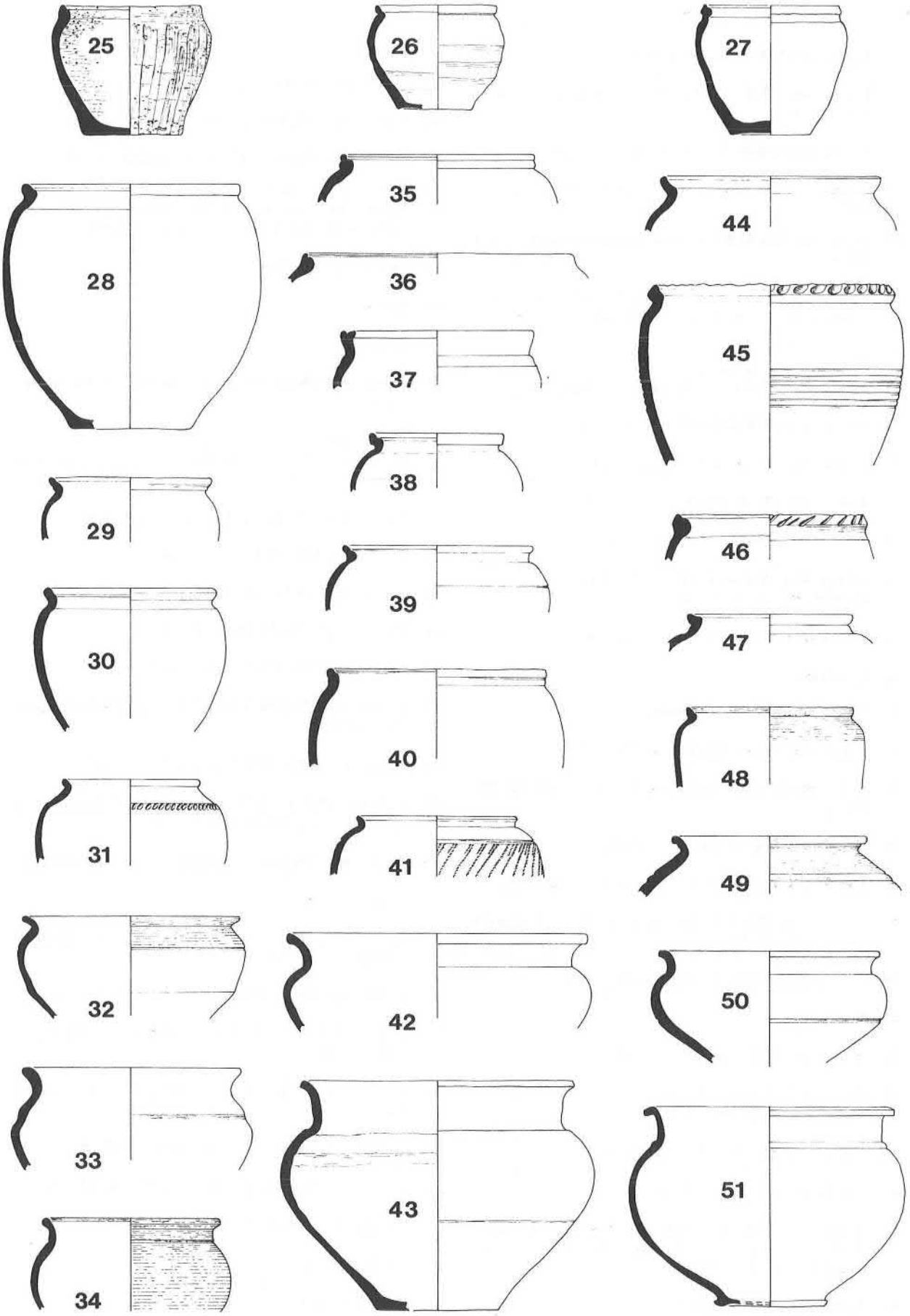

Figure 35: Local Belgic Grogged, Fabric 46, nos. 25–51, (Scale 1:4).

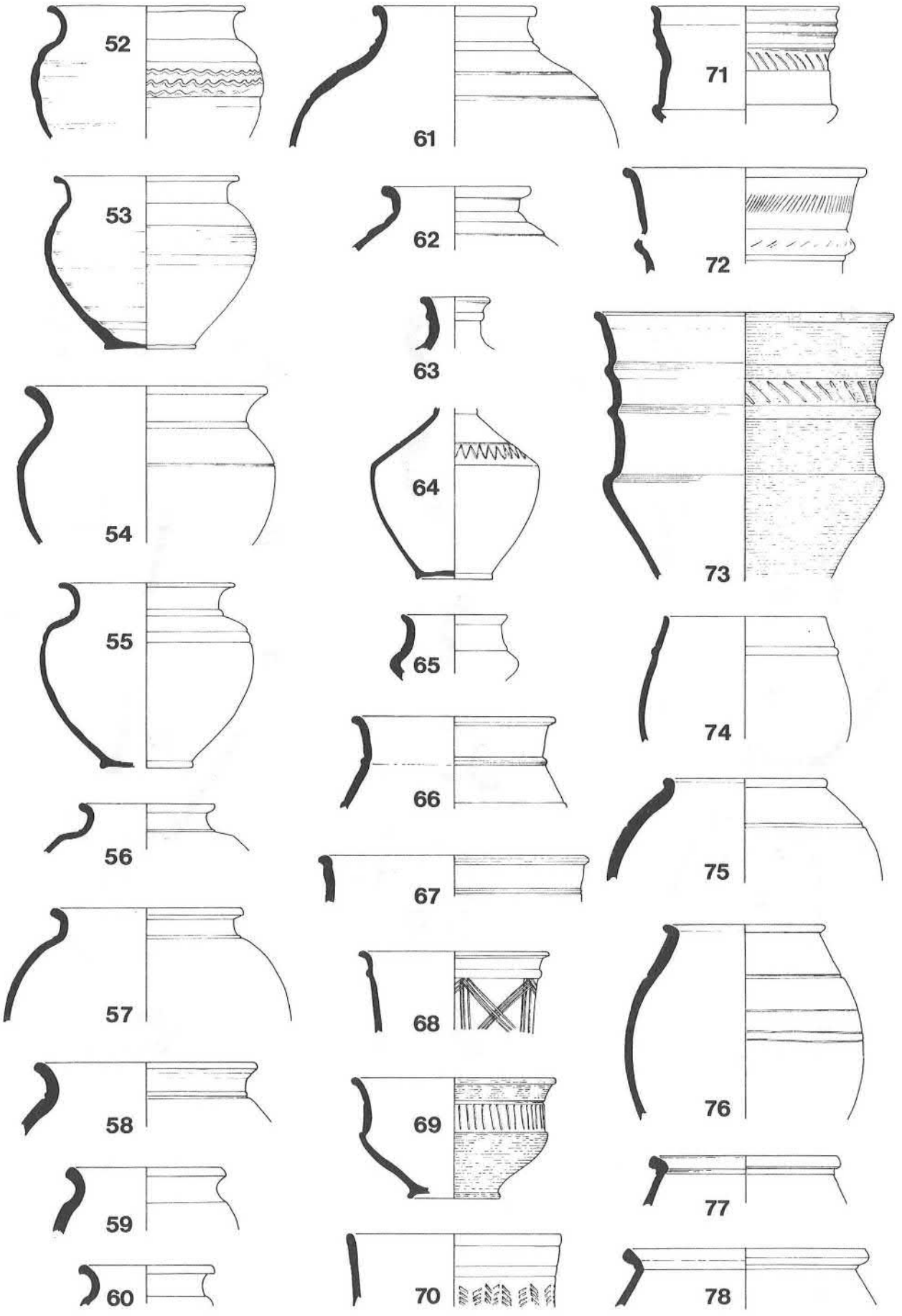

Figure 36: Local Belgic Grogged, Fabric 46, nos. 52–78, (Scale 1:4).

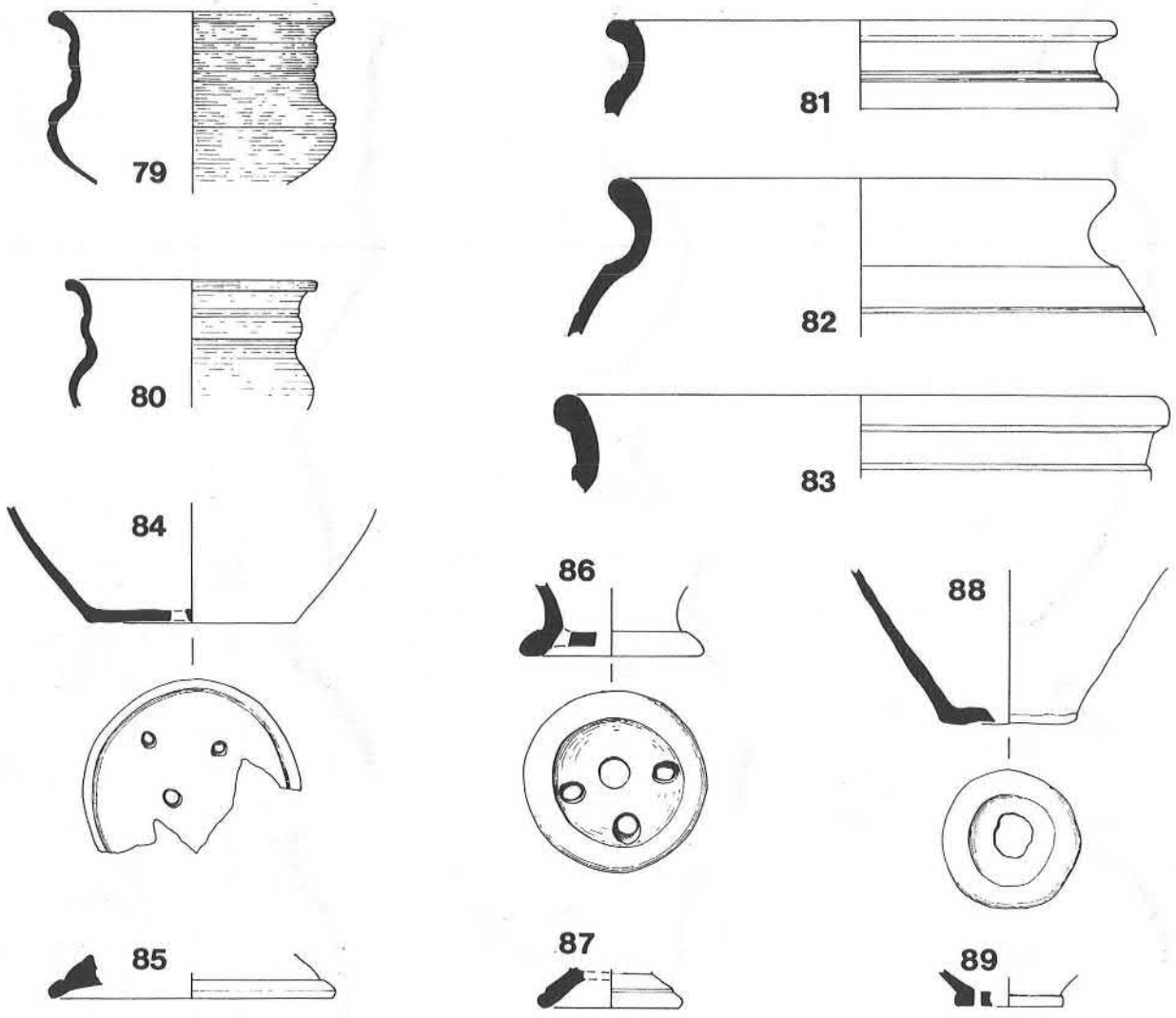

Figure 37: Local Belgic Grogged, Fabric 46, nos. 79–89, (Scale 1:4).

Figure 37, Fabric 46 continued.
79. Fabric 46a MK44 (106), first Cent.

80. As No 74 above.

81. As No 65 above.

82. As No 15 above.

80.

84. Fabric 46a MK44 (398), mid to late first Cent.

85. Fabric 46a MK297 (+) topsoil. Unusual base or perhaps part of a cheese press?

86. Fabric 46a MK44 (390), c. mid first Cent.

87. As No 15 above.

88. Fabric 46a MK44 (+) topsoil.

89. Fabric 46qr MK105 (367) first to early second Cent.

viii Products of Caldecotte Kiln I Fig 38

Caldecotte, in the parish of Bow Brickhill, lies on river terrace gravel in the valley of the river Ouzel at SP8907 3545. Excavations there in 1978 revealed a small rural community of the first and second centuries AD of which structures, field boundaries and industrial features were recovered (Petchey, forthcoming). Among the latter was a single small up-draught kiln of late La Tène derived near-surface form, constructed with turves and using portable prefabricated furniture; (Type F4/5 – Swan 1984 and Type IIA – Woods 1974). The furnace consisted of a small circular clay-lined scoop, within which much kiln debris and broken pottery were found.

It has been noted by Swan (1984, 55) that such surface and near-surface kilns must have produced considerable problems in maintaining the sealed atmosphere necessary for proper reduction; they were thus more suitable for oxidizing pottery. All of the pottery from the Caldecotte Kiln I, apart from a small number of sherds (the colour of which may have been accidental?) were oxidized; their surface colours ranged over pale-orange, deep-orange, brownish-orange to buff, all nearly always with a grey core. The pale orange surfaces predominated. Isobel Thompson (Thompson 1982, 22) suggests that such uniformity of colour indicates a deliberate control of the firing to achieve this effect and proposes that it was inspired by imported samian and terra rubra. She also notes that it was more common on sites not rich in imports, such as Prae Wood, Herts., especially between the years c. 30–50 AD. However, on this northern side of the Chilterns it is essentially a later phenomenon, dating to the conquest period and after (Thompson 1980, pers. comm.). The pottery from this kiln is in Fabric 46m which is a local version of the 'Belgic' grogged ware. Thin section analysis (see page 98) shows it to be of a poorly mixed clay matrix, containing grog/clay pellets, discrete fragments of ironstone and quartz, and in some cases small amounts of fossil shell with fine limestone fragments. However, sample briquettes of the same clays (taken from adjacent amorphous shaped pits cut into the river terrace gravel and proven by petrological analysis to be the source of the clay) when fired at temperatures exceeding 600 °C had the carbonate content burnt out, and as most of the sherds examined contained little limestone and had a high frequency of voids, a firing temperature between 700 °C and 900 °C is indicated. An interesting point noted during this analysis is that there is no difference in fabric between the apparently coarse storage jar material and the finer beakers.

The amount of pottery recovered from the kiln scoop was small, approximately 600 sherds. Of these, 76 were from coarse storage jars, whilst the other sherds were in a finer ware, occasionally burnished and beautifully made. Whether these proportions echo those of the vessels in the last fired kiln group it is difficult to say, for although the finer vessels far out-number the coarse this may merely reflect a higher level of breakages amongst the thinner walled ware. Presumably the kiln was used for more than one firing, but those vessels that misfired on previous occasions would have been crushed and used for grog-tempering in the next batch of pottery. Only after the final firing would those vessels that had broken be considered of no further use. These discarded fragments represent a fairly specialized range of forms. Jars or bowls with shoulder cordoning (eg. Nos 19-22) are the most common element; they are remarkably similar and were probably made with the use of a template. For this reason it is difficult to ascertain how many such vessels are represented. Visually there appear to be nineteen, whilst the rim percentage method indicates seven. This method is based on the percentage of rim present within each size range (100% obviously equalling a complete rim). However, where visually one might be able to determine several similar vessels of the same size, each individual vessel may be represented by a mere 5% or 10% of a rim, and as the combined percentages of several vessels may add up to less than 100% a single vessel only is indicated. If the percentage results in a level over 100% but under 201% then two vessels are indicated, and so forth. Presumably, with regard to the cordoned shoulder jars, the true figure is somewhere between seven and nineteen.

A similar problem is found with the jar fragments. These are vessels of which only the rims have been found, so no form other than that of

wide-mouthed everted-rim jar or bowl can be suggested (eg. Nos 23 and 24). Visually there appear to be fourteen; rim percentages indicate only three.

The butt-beakers (eg. Nos 12 to 18) are clearly nine different vessels, whilst the rim percentage method suggests only six. This indicates that the latter method may under-estimate by a third. Three bases with straight walls (eg. Nos 6 and 7) can be recognised by eye, the percentage figures indicate the presence of two – again a discrepancy of a third. The foot-ring bases (eg. Nos 8 and 9) can be seen to number four visually and three by percentages; a discrepancy of a quarter. The pedestal bases (eg. Nos 10 and 11) give another variant: they can be seen to be four whereas the percentages only record them as two, a discrepancy of a half. If these figures are, by analogy, applied to the possible number of jars/bowls the result is:

Rim percentage error	1/2	1/3	1/4
No of jars/bowls with shoulder cordoning	9.5	12.67	14.25
No of jars/bowls of unknown form	7.0	9.34	10.5

The kiln also contained the remains of one platter (No 26), three storage jar rims (Nos 1 to 3), two storage jar bases (No 4)and a rim fragment of a possible carinated cup (No 25).

The number of base fragments was far lower than that suggested by the number of rims. It may be that intact bases were removed, had their edges smoothed and were used as bowls, dishes or cups. Presumably they would not have been marketable, but the potters and their families would no doubt have found uses for them, or alternatively the abandoned kiln might later have been rifled by poorer sections of the community who might have made use of the bases in this way. Such bases were not however found in any number on the site during the excavations; indeed it is worth noting that on the whole the Caldecotte settlement wares are strikingly different from the Kiln I products. It appears as if the products from this kiln were not manufactured for the benefit of the community in which it was situated, for the majority of the features in the 1978 area (Area A) contained pottery later in date (largely late first to late second century) than the kiln; thus the kiln was not built within the confines of its contemporary settlement area. Neither does the kiln material appear in quantity on adjacent settlements. In the case of Saffron Gardens (Waugh *et al* 1974) this may be because the site was abandoned not long after the Roman conquest (*op.cit.* 379), but Caldecotte Area B, which produced only two or three pots in the finer kiln Fabric 46m, contained a whole range of pottery from handmade Iron Age material to wheelmade 'Belgic' lid-seated slashed rimmed jars and romanised wares of the first and second centuries AD.

Kiln I, with the exception of the storage jars, appears to have been manufacturing fine tablewares, not the type of domestic pottery so obviously in demand on Caldecotte B. Paul Tyers (pers.comm) noted with some surprise the total absence of the common Herts-Beds-Bucks-Northants lid-seated jars from the kiln repertoire. Also absent is the Bucks-Beds-Northants hollow-cordoned girth beaker, loosely based on the Cam.84. This type of vessel was found in quantity on the occupation site of Saffron Gardens (Waugh *et al* 1974) yet at Caldecotte, only 1.8kms distant, it was extremely rare. Girth beakers of this type are more easily equated with vessels to the north of this area (*op.cit.* 375) whereas the kiln material – the butt-beakers, platters and jars with flattened profiles – have similarities to many Hertfordshire vessels (Thompson 1982, 652).

In essence one is left with kiln material that dates to a time shortly after the conquest and bears Hertfordshire traits which are so strong as to look intrusive, an occupation site (Saffron Gardens) that was abandoned shortly after the conquest and whose pottery has closer affinities to the north of this area and, at Caldecotte itself, two areas containing pottery of different dates: Area A, within which the kiln itself was situated and which dates largely to the late first to late second century AD and Area B which, though essentially Iron Age through to Roman, produced only a handful of Kiln I material.

It is obvious from this summary that the vessels from Kiln I were not intended for marketing amongst the local settlements – who then were they for? The answer must surely be the Roman army. Vivien Swan (1975, 45) has suggested that it was the military markets which encouraged Essex and, more relevantly, Hertfordshire potters to migrate and possibly it was a military presence on the site of the later fort at Magiovinium (Woodfield 1977, 384) which resulted in Kiln I at Caldecotte.

38 Caldecotte Kiln I

Many of the vessels from this kiln are very similar to one another, so only a selection of the most typical and complete is illustrated. All are oxidized.

Thin-section analysis has shown the fabric of the coarser vessels to be identical to that of the fine ware (Fabric 46m) although by eye the coarser material bears a greater resemblance to Fabric 46a. For this reason the coarser vessels are labelled Fabric 46m/a.

1 to 3	Fabric 46m/a. Storage jar rims
4	Fabric 46m/a. Storage jar base
5	Fabric 46m/a. Storage jar body sherd.

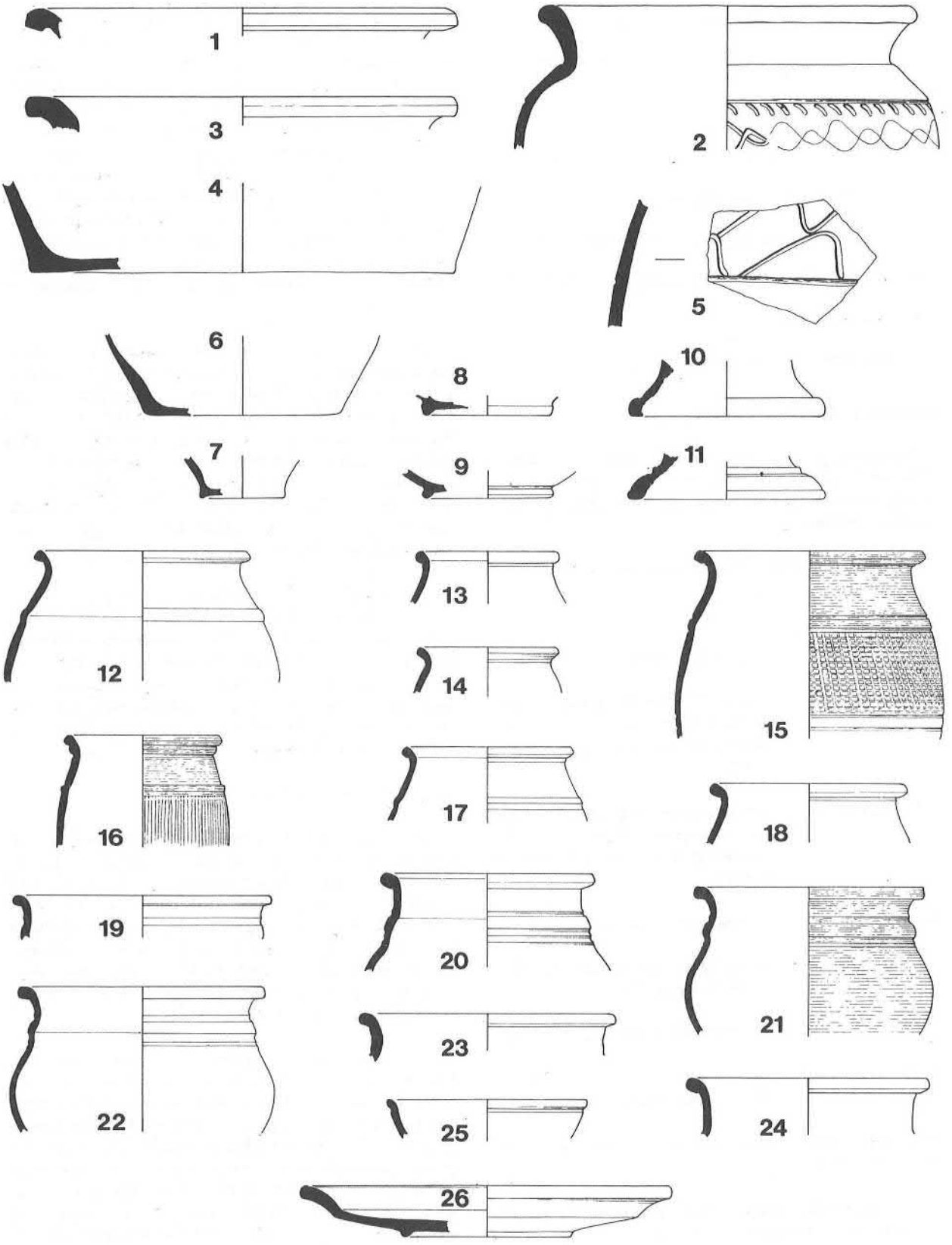

Figure 38: The Products of Caldecotte Kiln I, c. mid first century A.D., (Scale 1:4).

6	Fabric 46m/a. Straight-sided jar/bowl base
7	Fabric 46m Straight-sided miniature butt-beaker base?
8 and 9	Fabric 46m. Foot-ring bases
10 and 11	Fabric 46m. Pedestal bases
12 to 18	Fabric 46m. Butt-beakers
19 to 22	Fabric 46m. Shoulder-cordoned jars/bowls
23 and 24	Fabric 46m. Indeterminate jars/necked bowls
25 Fabric	46m. Cup
26 Fabric	46m. Platter

Caldecotte Kiln I Summary

Dated approximately to the mid first century AD; of Late La Tène derived near-surface form, constructed using turves and portable prefabricated furniture.

The pottery is all fast wheel-made, oxidized, in a local 'Belgic' grogged fabric.

Forms present:

A1.	pedestal bases (4).
B3–6.	jars with shoulder cordons, not narrow-mouthed (10–15, allowing for rim percentage error).
B1–1/D1–1/F1–1.	Plain everted rim necked jars/ bowls or pedestal vessels (7–11, allowing for rim percentage error).
C6–1.	storage jars, ordinary (3).
?E1–1.	possibly a rim fragment of a carinated cup (1).
G1–3.	platter with slight bead rim (1).
G5–1 and G5–2.	plain and decorated barrel-shaped butt beakers (9).

Plus one storage jar base, four footring bases and three plain bases.

The type definitions refer to those of Isobel Thompson (Thompson 1982).

Thin-section Analysis of the Products of Caldecotte Kiln I by J.R. Timby

Site Reference: 18 AF 74 F 1
S Grid Reference: SP 8935

Thin sections were prepared from a selection of seven sherds from the excavated kiln at Caldecotte, Buckinghamshire for petrological examination. The object of this examination was to establish whether the vessels represented by the sherds, found within the kiln fill, formed a homogeneous group, thus implying firing in-situ; and to compare the pottery with clay samples taken from nearby amorphous shaped pits cut into the river terrace. Lastly by characterising the fabric of the products of this particular kiln it is hoped that comparisons may be made with material found elsewhere in the locality to ascertain the scale and extent of production.

The specimens were first examined macroscopically. Surface colour generally ranged from a light red (Munsell 2.5YR 6/8) through light brown (7.5YR 6/8 – 5/2) to light grey, (7.5YR N/5), whilst the core was in all cases grey. The fracture was generally rough and the sherds varied from fairly soft to moderate hardness. Samples R458, R461, R462, R463, R464 and R465 represented 'beaker' vessels, R459 a thick walled 'Belgic' type storage jar and R460 a flared rim 'Roman' type jar.

The sample of clay, without further preparation was simply formed into two small briquettes (c. 6 × 2 × 3cm), one of which, (G65) was fired to a temperature of c. 1,000°C and the other (G66) to c. 600 °C in an oxidising atmosphere. The fired samples were then thin sectioned for comparison with the sherds. The results of the microscopic study are summarised in Table 3.

Site Reference: 18 AF 74 F 1

The sherds showed a section with a poorly mixed clay matrix, containing discrete fragments of ironstone and quartz. In some cases small amounts of fossil shell were present with fine limestone fragments. R460 was distinguished by containing a very high shell content and a low frequency of quartz. Other minerals present were in all cases represented by single fragments and thus of no great significance to the overall results.

The clay sample is probably derived from the Oxford clay beds of the Jurassic series which forms the dominant exposed solid formation in this area. Along the Ouzel valley in which the kiln site is located, the Oxford clay is partly concealed by glacial deposits, river terrace gravels and alluvium; although to the east of the Ouzel the glacial deposits have to a large extent been eroded. A borehole, (MK16 at SP 89081 35446) drilled in the locality on behalf of the Institute of Geological Sciences showed the clay to outcrop at a depth of only 2.49 metres (Horton, Shepherd-Thorn and Thurrell, 1974). The two briquettes were fired to give an oxidised exterior with a reduced grey (G66) or black (G65) core, comparable with the pottery.

Sample No.	Quartz	Fine	Medium	Coarse	Iron	Lime-stone	Shell	Chert	Other
R458	X	X	X	X	X	X	X	X	quartzite, silty mudstone
R459	X	X	X	–	X	–	–	–	numerous voids
R460	X	X	X	–	X	X	X	–	–
R461	X	X	X	–	X	–	–	X	silty mudstone grog/clay pellets
R462	X	X	X	–	X	–	–	–	plagioclase, voids,grog/ clay pellets
R463	X	X	X	–	X	X	–	–	plagioclase, mudstone, mica voids, grog/ clay pellets
R464	X	X	X	X	X	X	–	X	quartzite, voids,grog/ clay pellets
R465	X	X	X	X	X	X	–	X	plagioclase, voids, grog/ clay pellets
G65	X	X	X	X	X	–	–	–	–
G66	X	X	X	X	X	X	X	X	–

Fine = 0.25 mm and below
Medium = 0.25 – 0.5mm
Coarse = 0.5mm and above

Table 3. Results of microscopic study of the fabric of Caldecotte Kiln I products.

Ref No	Section No.	Mz	Size Parameters I	SK_I
1	R 458	3.15	1.45	– 0.1
2	R459	3.8	1.3	– 0.7
3	R 461	3.8	1.2	– 0.7
4	R 462	4.5	1.0	– 0.8
5	R 463	4.2	0.9	– 0.7
6	R 464	3.6	1.5	– 0.8
7	R 465	3.8	1.2	– 0.7
8	G 65	3.5	1.3	– 0.8
9	G 66	3.7	1.5	– 0.8

Table 4. Results of Textural Analysis of the fabric of Caldecotte Kiln I products.

In thin section however, the two samples showed a considerable degree of difference; whilst G66 contained a high percentage of limestone and shell fragments within the matrix, G65 contained only occasional iron and quartz grains with an apparent absence of limestone. This would seem to indicate that at temperatures exceeding 600 °C the carbonate content of this type of clay burns out leaving only voids within the matrix. Since the sherds examined contained, for the most part a high frequency of voids and very little limestone, a firing temperature between 700°C and 900°C is indicated.

A size analysis was carried out on the quartz grains within the clay matrices to provide a more objective basis for characterising the fabrics (R460 was excluded since it contained very little measurable quartz). One hundred randomly selected grains were measured in each sample and the size measurements grouped into classes (for explanation of the method, see Peacock 1971), and the following parameters calculated.:

Mz = Mean size
I = Standard Deviation
SK = Skewness – a measure of the asymmetry of the distribution. ie. a relative spread of the data on one side or other of the mean.

The textural analysis demonstrates a clustering of sherds 1, 2, 3, 6 and 7 around the two clay samples (8 and 9), suggesting that this clay was used, at least in part, for potting. All the samples show a negative skewness. Samples 4 and 5 lie slightly outside the main cluster despite a similarity in general composition. This could perhaps be attributed to a temporal difference in the production of the pottery or the exploitation of the same clay bed over a wider area, or reflect the work of more than one potter. A higher Mz value implies a smaller mean grain size and therefore perhaps more vigorous preparation of the clay.

It is interesting to note that there was no difference between the fabrics of the beakers and the storage jar. Functional differentation in vessel type therefore is not reflected in the choice of clay. This activity can perhaps be compared with the one at Weston Favell, near Northampton, which shows similar production characteristics (Bunch and Corder 1954).

ix Products of Caldecotte Kiln II Figs 39 and 40

The second kiln at Caldecotte, MK357, was discovered during stripping operations for a balancing lake in April 1982. It lay on river terrace gravel in the valley of the River Ouzel at SP 89093558. Earlier excavations in 1978–80 had revealed traces of a small rural community of the first and second centuries AD.

The kiln, which produced Fabric 47, and has been dated to the late first to mid second century AD, was approximately 70 metres to the east of the River Ouzel and approximately 80 metres from Kiln I. Unfortunately as it had largely been destroyed by the machinery, very little could be recorded; and it was impossible to specify the kiln type. The available evidence suggested that it was composed of a shallow scoop with a single flue; an adjacent ditch (Ditch 6) contained several fragmentary kiln bars and much burnt clay. There is the possibility that a stream was immediately adjacent.

The prefabricated kiln furniture was in the same sandy fabric as much of the coarser pottery; this has been verified by thin-section analysis. The analysed kiln-bar, in which local materials from the immediate surroundings may be assumed to have been used, contained ill-sorted sub-angular and sub-rounded quartz, iron ore, angular flint, phosphatic lenses, gluconite, sandstone, mica and grog. The abundant flint and fine clay matrix would suggest the use of First Terrace Gravels (thin-section analysis page 83). The kiln furniture consisted of bars with slightly tapered ends (two complete examples measure 290 and 310 mms in length), perforated clay plates and the remains of a large heavy clay ring segment.

A finished edge on the latter suggests that it had never been a complete circle. Due to its fragmentary state its dimensions are difficult to measure, but it would have been approximately 450–500 mms around the outer circumference, 90mms high and 110mms wide. The upper surface and sides are fairly well finished, the under surface is rough. Its use in the kiln can only be guessed at, although the fact that the underside of the segment was poorly made suggests that it rested upon this face and thus had been used horizontally in the kiln. It may be that it was employed with another similar segment to form a stacking ring. Being in two halves may have made it a more versatile prop; certainly the single segment resembles the sausage-shaped clay distance-pads used to aid the stacking of mortaria during firing at Holt, Denbigh (Swan 1984, plate 8).

Although the segment appears to be exceptionally large for a stacking 'ring' (those from Wood Burcote near Towcester average 200mms in diameter) it would have been too small to have been used as one of a number of arches forming a barrel-vault, as in a kiln at Biddlesden, Bucks (Woods *et al* 1981, 381). The possibility that it roofed part of the flue has also been considered but the lack of burning sug gests that it could not have occupied such a position.

Despite the fact that the area around the kiln was badly disturbed, two ditches and a gully were recognised. The ditches may have defined a working area, but this is purely speculative. Ditch 6 had been recut a number of times; its silt-bearing layers show that it had at times held water (although due to the proximity of the stream it is unlikely that this water was necessary for the production of the pottery). This same ditch contained a mass of burnt clay, charcoal, fragmentary fire-bars and pottery debris, and may best perhaps be described as a soak-away (Hull 1963, 38–39).

The pottery from the various levels of Ditch 6 forms a fairly uniform group and many pieces from different layers join. This suggests simultaneous deposition, or at least, a very swift build-up. The uppermost layer was one of redeposited clay; the ditch had obviously been intentionally backfilled. Sherds from Gully 4 were also found to have joins with pieces in Ditch 6, and Ditch 16 contained sherds in identical fabrics and forms.

In all, the pottery from the kiln and adjacent ditches formed a varied though related collection. There are some exceptions, which have been useful for dating, including several pieces of Hadrianic/early Antonine samian, granular Brockley Hill/Northants ware and some mica-dusted material. In total 583 sherds were recovered; 462 of these were probably kiln products. This figure cannot be definite as many of the fabric variations are misleading. For example, a handful of sherds from Ditch 6 are very like sherds determined, elsewhere, as Fabric 2b (page 000) originally thought to have begun about 160–170 AD. The pieces from Ditch 6 may be remnants of a vessel produced in Kiln II or they may be contamination. If products of the kiln they are provident indeed, for then not only are they the very earliest examples of this fabric but they also belong to a known kiln and are proof that Fabric 2 was made from the same clays as the Caldecotte Kiln I material, as was indicated by thin-section analysis.

The Kiln was used to produce both reduced and oxidized ware. Unfortunately the ability to fire for both reduction and oxidization gives no indication of kiln type. Surface kilns were inherently more suitable for oxidizing pottery but, despite this, throughout the Roman period reduced wares were produced in surface kilns (although sunken kilns made this process more controllable) (Swan 1984, 55). The clays that all the vessels were made from contained varying amounts of naturally occurring clay pellets, to which the potters added sand and some grog temper. For a detailed description of the fabric see thin-section Groups 7, 8 and 14. The isotropic matrices of all the sherds in thin section indicate that they were fired at temperatures over 700°C. The tempering material differs a great deal in quantity giving the sherds distinctive characteristics, so although the pieces form a related group some may have different Type Series numbers.

The list below gives the numbers of those fabrics found within the kiln scoop, the ditches and the gully; all were probably produced at the kiln. This is not to say that all examples of these fabrics recovered from within Milton Keynes were Kiln II products, though it is probable that they would have come from similar clays.

3c 9xy 46n 47a 47dg

2b 3gj 46g 46p 47ab 47j

3n 46j 46qr 47c 47k

(The list excludes the more obvious non-local wares)

The smooth unsanded Fabric 46p stands out a little from the rest of the material and may perhaps have been a product of an undiscovered neighbouring kiln. It does however overlap in fabric with 46c and 46qr, both of which do not look out of place as Kiln II products.

The range of forms produced – see Table 5 – does not appear to have been wide, although the lids were a fairly unusual recovery. Specialized vessels like flagons, mortaria and beakers were not made. Wide-mouthed jars or bowls were the dominant form.

The affinities of the kiln and the pottery are not difficult to gauge, for both appear to have their roots within 'Belgic' traditions. The wide-mouthed jars, for example (Nos 33–49), are a romanized derivative of a 'Belgic' form. This tradition may also be seen in the continued use of grog as a temper (combined with sand) and the use of portable prefabricated furniture in the kiln. The attempt at a pie-dish (No 2) shows connections with the Roman world but, as already noted, it is fairly crude. The finer fabric of pie-dish No 1 suggests that it was made elsewhere. There are no other types of Roman origin, such as imitations of samian forms. In this respect the products of this kiln differ from those at Hedgerley, Bucks (Oakley *et al* 1937,) although the jars (both wide and narrow-mouthed) are similar.

There are similarities too with some of the second century Northamptonshire kiln products, such as the lid seated jars (No 21–26) (cf Johnston 1969,

Vessel type		Rim size in mms.																							Total
		60	70	90	100	110	120	130	140	150	160	170	175	180	190	200	220	230	240	260	270	280	300	340	?	
Wide mouthed jars or bowls	Strat				2				3	1	3			3			1	1								15
	Unst					1					1			1		1	2									1 6
Lid-seated jars	Strat			1					1		1			1	1	1	1									7
	Unst															1										1
Narrow-necked jars	Strat	1	1			1	1	1	1																	6
	Unst						1																			1
Storage jars	Strat																		1	1		1	1	1		5
	Unst																					1				1
Bowls/ dishes	Strat					1		2	1																	4
	Unst										1					1						1				3
Lids/ dishes	Strat													2		1										3
	Unst																									0
Lids	Strat							1			1	1	1			2										6
	Unst								1					1												2
Misc	Strat										1															1
	Unst										1															1
Pie-dishes	Strat																									0
	Unst													1		2										3

Table 5. Vessel type, size and quantity from Kiln II Caldecote. Rim size in mms.

Fig 7, 60–62) but also disimilarities in that many Northamptonshire jars had grooved necks. The Northamptonshire kilns also produced dog-dishes, pie-dishes and beakers, though their presence may merely be a question of date rather than greater romanization. Certainly at this period an impression of individual style and expression is found in the pottery; an impression not found in the later ubiquitous black-burnished ware copies which exude an aura of mass-production. Such an impression points to Kiln II being within the 'Individual Workshop' designation (Peacock 1982). In such a system the potters produced their goods during the summer months and for the rest of the year found employment elsewhere. In the second century AD, especially, many such workshops appear to have flourished.

The siting of kilns and workshops must reflect demand. The individual workshop made pottery for a very local market, often comprising little more than the community in which the kiln was situated. The Caldecotte Kiln II must have made its pots for the rural farming community around it, as seen in the widespread field-system (report Petchey forthcoming) and possibly might also have sold any better quality surplus in the nearby town of Magiovinium. Certainly the excavations at Caldecotte have produced large quantities of material that look very like the Kiln II products (this is in marked contrast to Kiln I, whose products are strikingly different to the settlement wares).

Fig 39 Caldecotte Kiln II and adjacent features
Only a selection of the vessels recovered are illustrated. The bracketed figures refer to individual contexts.

1. Fabric 3k Black slipped. (3) Unstratified.
2. Fabric 46qr (3) Unstratified.
3. Fabric 9xy (11), black sooty layer beneath the kiln bars Ditch 6.
4. Fabric 47c (4) gulley.
. Fabric 47dg (8) dark grey silty clay layer in Ditch 6.
6. Fabric 46qr? (3) Unstratified.
7. Fabric 47j (8) as 5 above.
8. Fabric 9xy (3) Unstratified.
9. Fabric 47a (3) Unstratified.
10. Fabric 47a (3) Unstratified.
11. Fabric 9xy (3) Unstratified.
12. Fabric 47c (14) gulley.
13. Fabric 9xy (3) Unstratified.
14. Fabric 47c (10), black silty clay layer in Ditch 6, containing the bulk of the kiln bars.
15. Fabric 46p (5) kiln.
16. Fabric 47c (10) as 14 above.
17. Fabric 47dg (8) dark grey silty clay layer in Ditch 6.
18. Fabric 47a (4) gulley.
19. Fabric 47c (14) gulley.
20. Fabric 46p (4) gulley.
21. Fabric 47jk (4) gulley.
22. Fabric 3gj (3) Unstratified.
23. Fabric 47j (8) as 17 above.
24. Fabric 47j (11) black sooty layer beneath the kiln bars in Ditch 6.
25. Fabric 47dg (8) as 17 above.
26. Fabric 46qr (8) as 17 above.
27. Fabric 3c (14) gulley .
28. Fabric 47c (8) as 17 above.
29. Fabric 47c (8) as 17 above.
30. Fabric 47k as 17 above.
31. Fabric 47a (10), black silty clay layer in Ditch 6, containing the bulk of the kiln bars.
32. Fabric 47j (3) Unstratified.
33. Fabric 47? heavily burnt (10), as 31 above.
34. Fabric 47c (10) as 31 above.
35. Fabric 47c (11) black sooty layer beneath the kiln bars in Ditch 6.
36. Fabric 47j (4) gulley.
37. Fabric 47a (3) Unstratified.
38. Fabric 3gj (10) as 31 above.
39. Fabric 47a (4) gulley.
40. Fabric 3gj (3) Unstratified.
41. Fabric 47j (8) dark grey silty clay layer in Ditch 6.
42. Fabric 47a (3) Unstratified.
43. Fabric 47jk (4) gulley.
44. Fabric 46p (8) as 41 above.
45. Fabric 47dg (3) Unstratified.

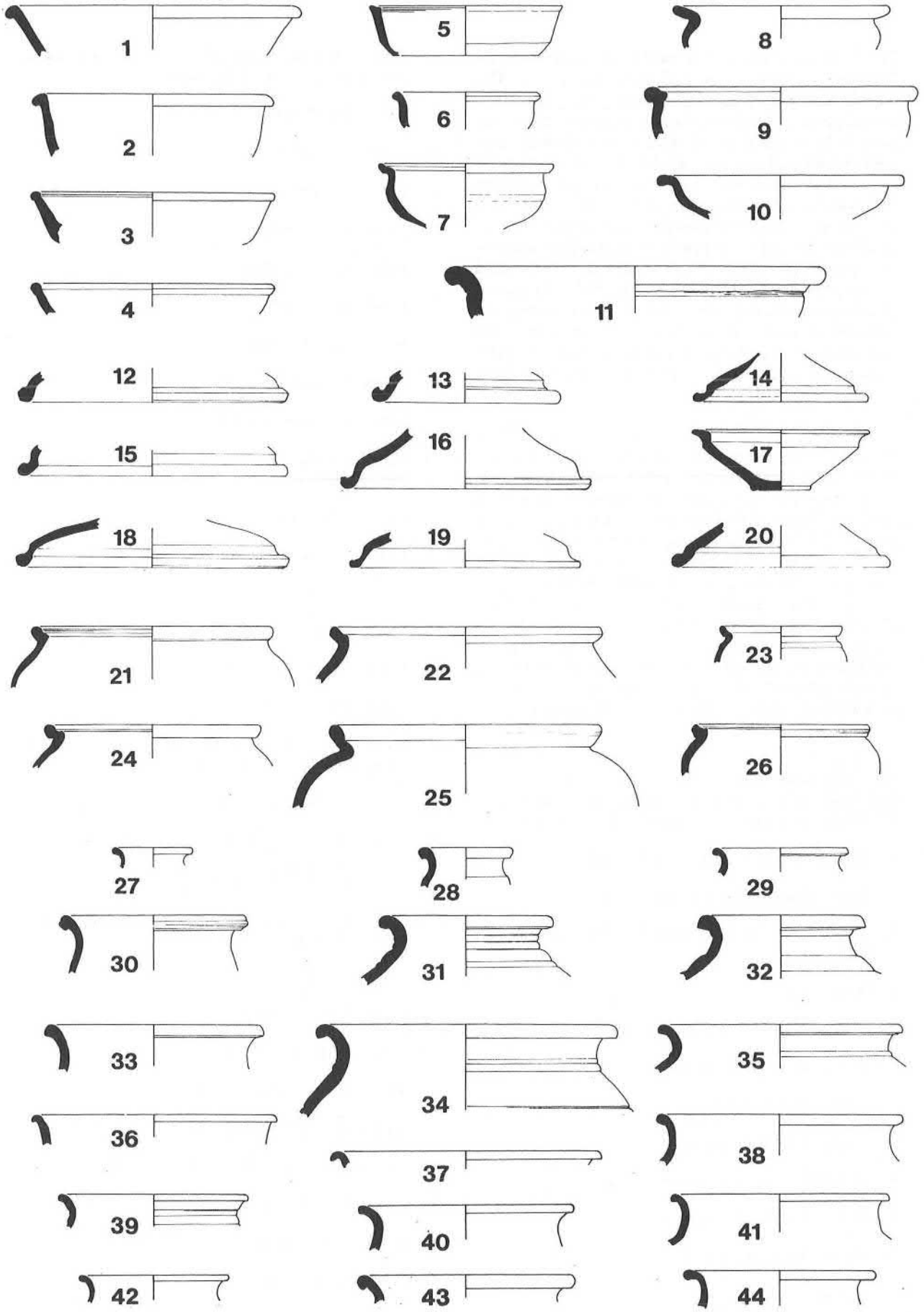

Figure 39: The Products of Caldecotte Kiln II, c. early to mid second century A.D., nos. 1–44, (Scale 1:4).

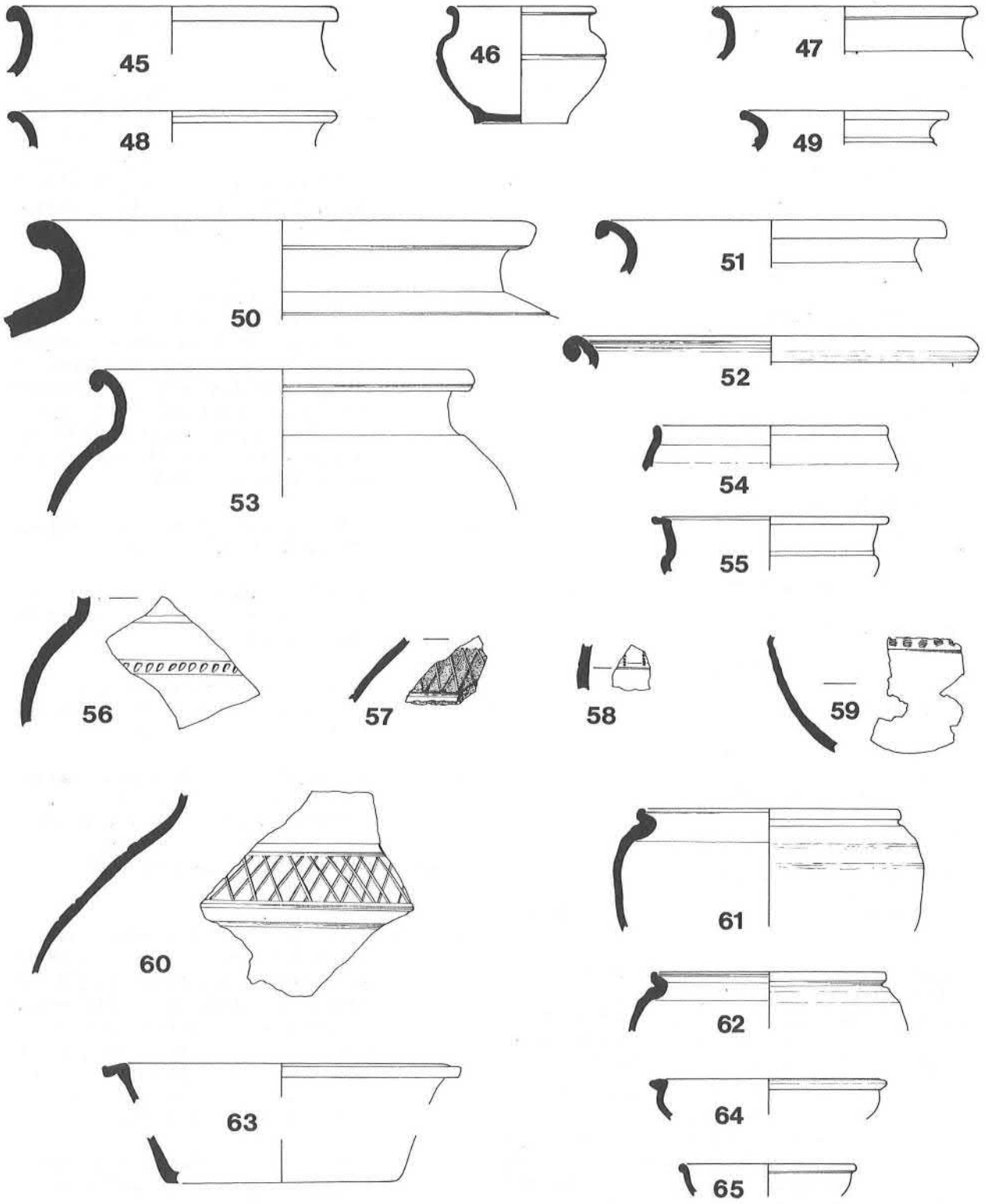

Figure 40: The Products of Caldecotte Kiln II, c. early to mid second century A.D., nos. 45–65, (Scale 1:4).

46. Fabric 46p (11) black sooty layer beneath the kiln bars in Ditch 6.

47. Fabric 3gj (3) Unstratified.

48. Fabric 47dg (3) Unstratified.

49. Fabric 46qr (8) dark grey silty clay layer in Ditch 6.

50. Fabric 46g (10) black silty clay layer containing the bulk of the kiln bars.

51. Fabric 47jk (4) gulley.

52. Fabric 47k (14) gulley.

53. Fabric 47k (10) as 50 above.

54. Fabric 47? heavily burnt (5), kiln.

55. Fabric 46n? (3) Unstratified.

56. Fabric 3gj (5) kiln.

57. Fabric 46qr (10) as 50 above.

58. Fabric 47c (11) as 46 above.

59. Fabric 47a (8) as 49 above.

60. Fabric 47k (10) as 50 above.

61. Fabric 1a (11) as 46 above.

62. Fabric 1a (8) as 49 above.

63. Fabric 34d (8) as 49 above.

64. Fabric 1a (4) gulley.

65. Fabric 38 (3) Unstratified.

Vessels 61 to 65 are not believed to be Kiln II products.

Caldecotte Kiln II Summary Figs 39 and 40

Dated approximately to the late first to mid second century AD. The pottery is all fast wheel-made, reduced or oxidized and usually sand-tempered with occasional grog and clay pellets.

Nos 33–49 *Wide-mouthed jars or necked bowls.* Some of these have thin neck cordons, shoulder or girth grooves. Most – just over 71% – were reduced, with black or grey surfaces and grey cores. In total twenty-one were recorded; fifteen from features, six unstratified.

21–26 *Lid-seated jars.* The smallest of these has a neck cordon. Surface colour varies considerably – 50% are oxidized, 37.5% are reduced. The remaining vessel, 12.5%, consists of two joining sherds, one of which is oxidized, the other reduced.

In total eight lid-seated jars were recovered; only one was unstratified.

Nos 27–32 *Narrow-necked jars.* 'Rippling' or light cordoning appears to be a decorative technique preferred on this vessel type; it occurs on the neck and/or shoulder. Of the seven found three (42.86%) were oxidized and four (57.14%) reduced, although two of the latter had an orange bloom.

Nos 50–53 *Storage-jars.* (Vessels 24 cms in size and over). Only one of the six rims found bears any form of decoration: a shallow shoulder groove. However, decorated storage jar body sherds were recovered that show a small range of techniques – incised wavy lines, burnished latticing, cordons and grooves. The cordons may have stabbed decoration.

All the rims found were oxidized, either in Fabric 47k, or 46g.

Nos 1–11 and 17 *Bowls/dishes.* These are all reduced, with the exception of one of the smaller vessels.

Nos 12–16 and 18–20 *Lids.* It is possible that some of these may have doubled as dishes. All but two were reduced.

No 55 *Miscellaneous.* Flat-rimmed necked bowl or possible copy of a hollow-cordoned girth beaker (unstratified).

No 54 Biconical carinated bowl with a bead rim.

Nos 1–2 *Pie-dishes.* These three vessels were all unstratified. The two larger vessels are not in Kiln II type fabrics (being 3k with a black slip and 9f). The smaller vessel is in Fabric 46qr and possibly is a kiln product; its walls are straighter than those of the other pie-dishes and it is fairly crude – it can possibly be seen as an early example of the type.

Not illustrated: *Bases* Five storage-jar bases, twenty-seven jar/bowl bases.

Sherds from Kiln II were included for thin-sectioning with other local sand-tempered wares. For the results of this analysis see pages 83–86.

x *Mortaria* (local – Bucks/Beds/Northants) See pages 129–135.

B: REGIONAL WARES

THE UPPER NENE VALLEY

i Mortaria

See page 000.

ii Greywares Fig 41

Fabrics 14a, 14b, 14c and 14/33

This is a diverse group reflecting, perhaps, the many kiln sites found in the Northamptonshire/ Upper Nene Valley area (Johnston 1969, 75). Both form and fabric point to this region as their source, for the group contains double-rimmed vessels, groove-necked jars, dog-dishes with an internal groove between base and wall, and decoration such as notching and frilling (*op.cit.* Figs 5–7). The clay has much fine white and clear quartz and is usually one of many shades of grey or off-white, commonly with a core of a different colour (*op.cit.* page 81).

The large number of kilns in the Upper Nene Valley and the use of similar clays and forms makes identifying material from the different kilns appear impossible. The group of kilns at Biddlesden (Woods *et al* 1981, 369) which straddles the S. Northants/N. Bucks border is also included within this division; greyware sherds from the site fit neatly in the Fabric 14a category whilst the oxidized sherds have greater affinity with the Fabric 17 group.

Examples of Fabric 14 were first recognised in Group 3, MK345 dated late first-early second century. It occurs as both Fabric 14c and 14/33, the coarser versions of the ware, especially the latter, which is granular. However, despite this coarseness the vessel forms are attractive; in Fabric 14c, Fig 8, 17, is found a large wide-mouthed bowl with sharply everted rim, a deep straight-sided bowl decorated with a single cordon and a wide-mouthed bowl or jar with a neck cordon. In Fabric 14/33, Fig 8, 18, is a small wide-mouthed bowl similar to very sandy vessels which were quite common at Brixworth in the Flavian-Trajanic period, 68–117 AD (Woods 1970, 14). Within Group 3 Fabric 14 equals 1.81% of 831 sherds.

In Group 4 only 0.78% of the 511 sherds are is believed to be in Fabric 14. This is composed of four sherds in Fabric 14a, one of which, Fig. 9, 26, is decorated with barbotine studs, as on a poppy-headed beaker. Originally it was thought that this material might be a Highgate product (Brown and Sheldon 1974, 224) but the fabric is slightly too sandy. Poppy-headed beakers were made in the Upper Nene Valley, at Ecton, Mears Ashby and Little Billing and probably other unknown kiln sites in the region (Johnston 1969, 87).

A single body sherd in Fabric 14/33 was found in Group 5, which dates from early to the third quarter of the second century, where it equalled 0.26% of the 384 sherds. However, among the rich finds of the Group 6 pit group, Fabric 14 equalled 3.07% of the 847 pieces, occurring in each of the fabric divisions but predominantly as the finer Fabric 14b. All four rim pieces are in Fabric 14b; they include two beakers, Fig 13, 78 and 80, one pie-dish (similar to Fig. 11, 25) and a wide-mouthed necked bowl, Fig 12, 41.

Fabric 14 did not occur at all in Groups 7 and 8, dated late and very late second century respectively. This lack was balanced by the large quantities found in Groups 9 and 10. In Group 9, dated late second to early third century, 9.52% of 126 sherds was in Fabric 14a, composed of a fine burnished blue-grey dog-dish, Fig 16, 4, complete with internal groove at the junction of wall and base, a lattice decorated body sherd, a grooved body sherd and several plain pieces. In Group 10, late second to mid third century in date, the 120 sherds included eight pieces in Fabric 14a (6.66%). All but one of these pieces are from the same lattice decorated vessel, Fig 17, 19, the form of which appears to be a bowl. These sherds demonstrate the same type of throwing technique as the Mears Ashby pie-dishes discussed by Johnston (1969, 85), though in this instance the two layers of the wall, though very distinct, have not separated.

A single sherd in Fabric 14 was found in Group 12 and three sherds in Group 17. These are thought to be residual as most of the material from the Upper Nene Valley kiln sites dates from the first and second centuries, although sites such as Ecton and Little Houghton produced mortaria and large storage jars late in the third century (Johnston 1969, 76).

The Upper Nene Valley wares found in this area are evidence of trade between the two regions, but the quantities involved are surprisingly small. Johnston (1969, 77) discussed the apparently purely local distribution of the kiln products and concluded that transport difficulties and competition were to blame. River transport is not possible from the Upper Nene to this area, whilst the Watling Street did not run close enough to the kiln sites to have made the transportation of large loads of pottery a viable proposition. Even if it had been economically sound, the dominance of the shell-gritted wares in this area during the second century would have made the competition fierce. The shell-gritted industries also had the benefit of cheaper waterborne transport - the Ouse and the Ouzel - and thus could probably market their wares more favourably. It is interesting to note that the date range for the high levels of Upper Nene Valley greywares coincides with the dramatic slump of the shelly wares and the smaller slump of the local grey and black sand-tempered wares. It also coincides

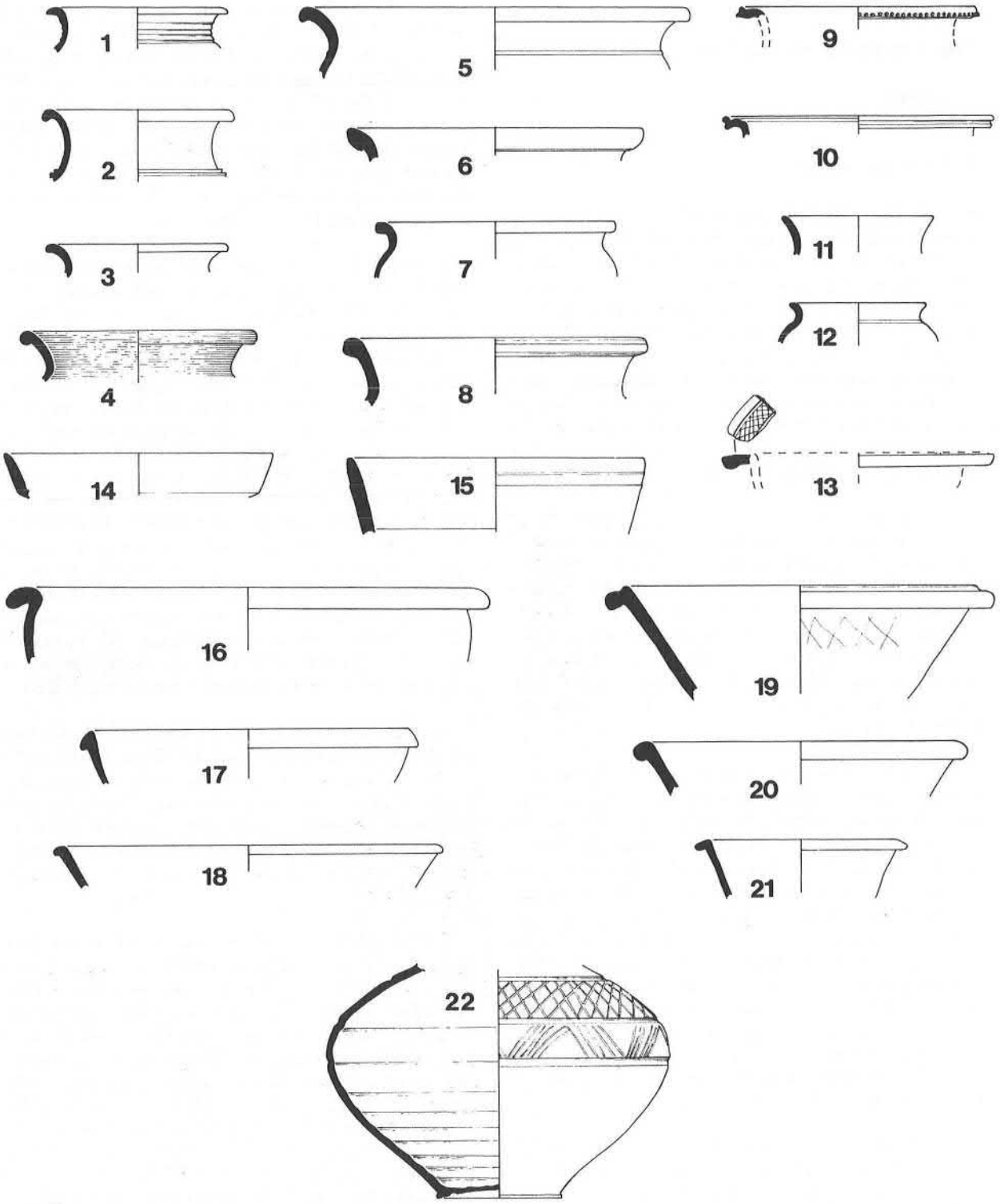

Figure 41: Upper Nene Valley Greyware, Fabric 14, (Scale 1:4).

with higher percentages for Lower Nene Valley wares, a situation which might imply that with the establishment of stronger trade links with sites further downstream on the Nene, the Northamptonshire potteries were to make use of more advantageous transport arrangements, a situation to which the third-century decline in Lower Nene Valley wares, in this area at least, would swiftly have put an end. It may be that the potteries of the Upper Nene Valley did not have the benefit of a middle-man to organize transport and outlets for their goods.

In the third century the Northamptonshire potteries suffered a recession from which they did not recover and Johnston (1969, 97) suggests that this was followed by a complete breakdown in the fourth, perhaps initiated by the even greater success of the Lower Nene Valley colour-coated industries.

Thus for most of the Roman period the Upper Nene Valley potteries were marketing only on a very small scale in this area, even during their first and second century floruit. However, locally in Northamptonshire on sites like Overstone (Williams 1976) and Thorplands (Hunter and Mynard 1977) they generally commanded an impressive 60% average. Perhaps it is because the quality of the ware is good and the kilns so numerous that one expects the industry to have been geared for export but obviously owing to their geographic situation and strong competition this was not the case.

The illustrations show the range of vessel types. Dates given refer to contexts, unless otherwise stated.

Fig 41 Fabrics 14 and 14/33

1. Fabric 14a MK44 F11 (2). Predominantly second to early third Cent.
2. Fabric 14a MK63 C 7, unstratified.
3. Fabric 14a As No 1 above.
4. Fabric 14a MK211/61, late second to third Cent.
5. Fabric 14a or b, MK63 C.14, late second to late third Cent.
6. Fabric 14/33 MK44 F106 A (1), mixed but largely late second Cent.
7. Fabric 14a MK63, unstratified.
8. Fabric 14a MK45, AAT2, second to fourth Cent.
9. Fabric 14a MK301/5, destruction rubble.
10. Fabric 14c MK301 S1 (1), disturbed second Cent. soil level.
11. Fabric 14c MK44 F91 C (1), early to the third-quarter second Cent.
12. Fabric 14a or b. MK63 C 6, late second to late third Cent.
13. Fabric 14c MK105 (437) topsoil.
14. Fabric 14a MK44 F108 C (1), mixed dating, predominantly late first to late second Cent.
15. Fabric 14a MK250 (657), residual in a grubenhaus.
16. Fabric 14c MK44 F186 A(3), mixed dating, predominantly second Cent.
17. Fabric 14a MK44 F106 A (1), mixed but largely late second Cent.
18. Fabric 14b or a, as No 17 above.
19. Fabric 14b or a, as No 17 above.
20. Fabric 14a MK44 F186 A (3), mixed dating, predominantly second Cent.
21. Fabric 14a MK100 D6, predominantly second Cent.
22. Fabric 14a or 12? MK64 F2 mid to late second Cent.

iii ?Northamptonshire painted ware (Fig 42)

Fabric 16

To date only one painted sherd, No 1, has been found that is obviously not from one of the larger industries. Its fabric is very similar to Fabric 17f, believed to be a Northamptonshire product; the painted decoration may be part of the tradition seen at Rushden (Woods and Hastings 1984, 37) and Brixworth (Woods 1970, 36).

The sherd came from a heavily disturbed layer at Stantonbury (81MK301 40). The rest of the pottery in this context was of the first to fourth centuries AD. To judge by the form of the rim, apparently a samian Dr 36 copy, and by comparison to a Brixworth example (*op.cit.* Fig 38, 265), the vessel could be Antonine, although painted vessels in an identical fabric copying samian forms Dr 30 and 37 were found at Allen's Yard, Towcester, accompanied by Flavian samian (C Woodfield, pers.comm).

Fig 42,1

1. Fabric 16 MK301/40, heavily disturbed second Cent. ground level

iv Oxidised wares Fig 42

Fabrics 17a, 17b, 17c, 17d, 17e and 17f

This fabric group contains, within the Type Series, sherds from the actual kiln sites of Ecton, Little Houghton and Biddlesden; thus comparative work has been possible. Some sherds believed to be oxidized Upper Nene Valley/Northants products

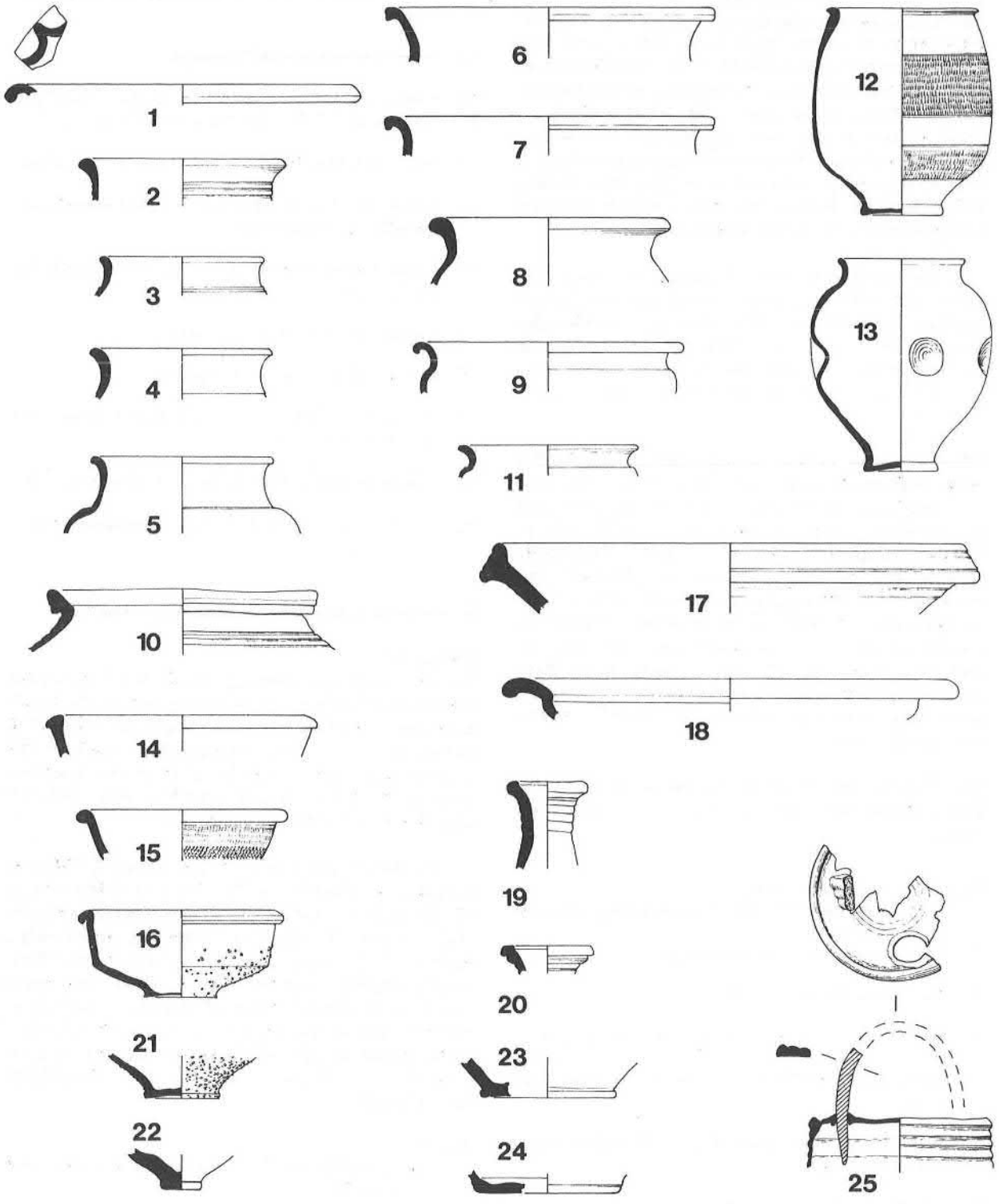

Figure 42: ?Northamptonshire Painted Ware, Fabric 16, no. 1 and Upper Nene Valley Oxidised Wares, Fabric 17, nos. 2–25, (Scale 1:4).

have a somewhat streaky appearance owing to the surface application of a watery slip or colour-wash. This wash is commonly bluish-grey or dark brown in colour, laid over a pale orange, orangy-pink or orange-brown base. As with Fabric 14 (the Upper Nene Valley/Northants reduced ware) the tempering in these vessls is of fine white and clear sand, which varies in quantity between the fabric subdivisions.

The possible origins of this group were first pinpointed by Mrs Kay Hartley when she identified a mortarium rim from Wymbush as a Northamptonshire product. This rim with its pinky-orange surface coloured with a watery grey wash and its streaky pink and greyish-cream core became an exemplar for other possible oxidized Northamptonshire products.

The designation of Northamptonshire as the place of origin for the mortarium rim has been verified, as far as is possible, by comparison with kiln material largely from Ecton and Biddlesden. (Biddlesden is in fact in North Bucks, but as the kilns themselves straddle the Bucks/Northants border and the pottery produced there has affinities with Northamptonshire material it was felt appropriate to keep it with group 17). Much of the pottery from Biddlesden is commonly colour-washed and has 'matured' in firing to be extremely hard and of uniform colour throughout the body (Woods *et al* 1981,386). However, where the length of the firing time has been shortened, 'strata' or streaks of colour can occur; an example from Wymbush contained a thin central vein of pale grey sandwiched between layers of pinkish-orange, off-white and pale orange (a sherd identical to this in all but burnishing was found at Biddlesden).

At Ecton too vessels were oxidized and slipped with thin washes. This and the similarity of fabric presents difficulties in distinguishing between material from the various Upper Nene Valley kiln sites, as pointed out by R.E. Turland in his conclusion on the Ringstead pottery (Turland 1980, 22).

Oxidized Upper Nene/Northamptonshire pottery is not found in large quantities in Milton Keynes. Two base sherds, 0.39% of 511 pieces, came from Group 4, the late first to mid second-century ditch assemblage in the Loughton Valley. The base is in Fabric 17c; it has a small diameter of only 50mm and was presumably part of a beaker (not illustrated). Another assemblage of similar date (early to mid second century) at Woughton produced a neckless jar, No 10; the form is similar to one from Brixworth dated to the Antonine period c. 138–192 AD (Woods 1970, Fig 31, 225), and to one from Ecton of third-century date (Johnston 1969, Fig 7, 63). Group 5 at Caldecotte, dated from early in the second century to its third quarter, produced a single handle sherd, Fig 10, 22 representing 0.26% of 384 pieces. The handle, which is granular and pale orange in colour is very similar to material from the Verulamium region but as pointed out by Kay Hartley in her report on the Towcester mortaria the Upper Nene granular fabric contains quartz, red-brown and possibly flint tempering, but the amount varies and is always less than would normally be expected in a Brockley Hill fabric (Hartley 1980, 77). This handle is therefore believed to be from a Northamptonshire flagon or jug. Caldecotte also produced No 19, a flagon neck in Fabric 17c; it came from a mixed group of mid first to mid second-century date and is orange-brown in colour with carelessly formed 'rings'.

The mid to late second-century Group 6 from Woughton contained 2.24% out of 847 sherds in Fabric 17 . This was composed of a wide-mouthed jar or necked bowl, five beakers (one not illustrated) and a base of a vessel of unknown form. Two of the beakers are rouletted, another is indented.

The large ditch (T9) at Holne Chase (RMK 30–32), also dated largely to the mid to late second century produced a complete profile of one of these rouletted beakers in Fabric 17c, No 12, and the complete profile of a small well-made carinated bowl with roughcast decoration in Fabric 17d, No 16. The bowl type is common in the Antonine period at Brixworth (Woods 1970, Fig 13, 66–67) and was also found at Towcester in a mid to late second- century pit (Symonds 1980 Fig 26, 138–139) and at Quinton in a feature dated 150–170 AD (Friendship-Taylor 1979, Fig 46, 224). Roughcasting was also used on Northamptonshire beakers (Woods 1970, Fig 23, 154–159 and Symonds 1980, Fig 26, 138–139). To date only the base of one of these roughcast beakers, No 21, has been recovered in this area, from feature F165 at Caldecotte, widely dated to the mid first/mid second century, although a sherd possibly from the same vessel was recovered from a neighbouring feature F111, dated early to third quarter of the second century. At Brixworth this type of beaker occurred frequently in the Antonine pits.

The rouletted beakers, as found in Group 6 and the Holne Chase ditch are most common in the later Antonine and Severan levels at Brixworth, where it was noted that the form of these vessels and their ware suggested that they were local copies of contemporary beakers in colour-coated ware (Woods 1970, 22).

Despite the occurrence of Fabric 17 in the later second to early third-century ditch group at Holne Chase and at Brixworth, it is not well represented in most groups of that date in this area. The exception is Group 8 (very late second century) where it equalled 3.22% of only 93 sherds, composed of a fairly shallow triangular-rimmed bowl/dish (Fig

15,3) in a good hard pale orange Fabric 17b (altnough reference should be made to the discussion on Group 8, page 000). In Groups 7, 9 and 10 (late second to mid third century) Fabric 17 did not occur at all. Johnston (1969, 76) discusses the recession of the Northamptonshire kiln sites in the third century. Production of basic forms may have continued on a limited scale to supply occupation sites around Northampton, whilst at Ecton and Little Houghton mortaria and storage jars were produced late in the third century, but essentially the picture that emerges is one of recession in the third century followed by complete breakdown by the beginning of the fourth. For this reason those sherds found in the later groups are thought to be residual; the exception to this is the Northamptonshire mortarium rim (Fabric 4ea) from the safely sealed mid fourth-century Group 14 at Wymbush.

The illustrations show the range of vessel types. The dates given refer to contexts, unless otherwise stated.

Fig 42, 2–25 Upper Nene Valley Oxidized Wares

2. Fabric 17f MK64 F2, mid to late second Cent. Parts of this same vessel were found in a reduced condition –. Fabric 14b.

3. Fabric 17f MK105 (+) topsoil.

4. Fabric 17a MK301 S1 (1), disturbed second Cent. soil level.

5. Fabric 17a MK100 D2, mid/late second to late third/early fourth Cent.

6. Fabric 17a MK44 L.141, mixed dating, largely first and second Cent.

7. Fabric 17f MK44 L.176, mixed dating, predominantly second Cent.

8. Fabric 17d/e MK301/39, disturbed level, largely second Cent.

9. Fabric 17f MK297 F65, mixed dating, predominantly second Cent.

10. Fabric 17c MK297 F55, early to mid second Cent.

11. Fabric 17a MK64 F2, mid to late second Cent.

12. Fabric 17c MK45 AA T9, predominantly mid to late second Cent.

13. Fabric 17e MK44 F31 F (1), early to mid second Cent.

14. Fabric 17b MK301/47, second Cent.

15. Fabric 17b MK301/73, rubble.

16. Fabric 17d MK45 AA T9, predominantly mid to late second Cent.

17. Fabric 17b MK105 (+) topsoil; copy of a mortarium form.

18. ?Fabric 17a MK211/16, rob trench, undated.

19. Fabric 17c MK44 F165 C (1), mid first to mid second Cent.

20. Fabric 17f MK301 S1 (1), disturbed second Cent soil level.

21. Fabric 17c MK44 F165 B (1), as No 19 above.

22. Fabric 17a MK44 F229 (1), mixed dating, first to second Cent. and medieval.

23. Fabric 17e MK45 AA T9, predominantly mid to late second Cent.

24. Fabric 17de MK301/39, disturbed second Cent. level

25. Fabric 17d? MK44 F165/141/124, first to second Cent and medieval. Extremely odd vessel, unknown usage. Possibly medieval although the fabric looks Roman. Similar bucket-type vessels in oxidized mica-dusted wares occur in sets with flagons and paterae, possibly for ritual purposes (C. Woodfield, pers.comm.).

v White and Pink Wares Figs 43 and 44

Fabrics 18a, 18b and 18c; also 18g which is probably from Hertfordshire.

The range of fabrics within this group is immense, ranging from the finest, virtually untempered material to pieces that are extremely coarse and granular in composition. Determining the place of origin of these wares with any certainty has unfortunately proved almost impossible. Several sherds were sent to Mrs Kay Hartley who very kindly examined them and came to the conclusion that most of them probably originated from small workshops in the Northamptonshire region. For this reason the complicated fabric divisions became redundant and were abandoned in favour of a more basic set of categories, fine, medium and coarse – a, b and c respectively.

Although a great deal of the whiteware from this area is likely to have come from the kilns of the Upper Nene Valley/Northamptonshire, material (Fabric 18g) did arrive here from the Verulamium region (Brockley Hill, Radlett etc.). There is also the possibility of ware from Oxford, the Lower Nene Valley and the occasional import. However, the limits of distribution for the Oxford white wares were small (Young 1977, 97) and it is plausible that such vessels never reached this area. With this in mind, the fabric of some sherds, especially the wide-mouthed jar, No 1, very closely resembles, both macro- and microscopically, the fabric of Oxford mortaria identified by Mrs Hartley. Other vessels, Nos 7 and 8, have a fabric which resembles that of Lower Nene Valley mortaria.

There was a complete absence of whitewares from the earliest group of pottery discussed here, Group 1, dated early to mid first century AD, although this is not to say that whitewares were unknown in this area at that period, for a whiteware beaker of Cam.113 form was part of an early ditch group from the later excavations at Caldecotte, unfortunately outside the scope of the present discussion.

The pit group assemblage, Group 2, dated mid to late first century AD, produced a whiteware rim in a fine sandy fabric, 18a, possibly that of a flagon or narrow-necked jar (Fig 7, 40). In this assemblage Fabric 18 made up 1.9% of the 475 sherds. Coarse whitewares were retrieved from the late first to early second century Group 3, composed of a pale pinkish ringneck flagon (Fig 8, 38) and three white body sherds. The flagon may be a Verulamium region product. The percentage figure for Fabric 18 in this group is 1.32% of 831 sherds.

The pottery from Group 4, dated late first to mid second century, had the higher percentage of 3.91% out of 511 sherds. This was composed largely of body sherds and bases, the only rim being that of a small narrow-necked jar or flagon (Fig 9, 28). The later Group 5, early to third quarter of the second century in date, had a surprisingly large quantity of whiteware body sherds, 10.16% out of 384 sherds. Only one rim was found, that of a reeded-rim bowl in a coarse fabric (Fig 10, 10).

The mid to late second-century pit, Group 6, produced 6.96% in a variety of white-ware fabrics and forms. The rims of two wide-mouthed jars and a bowl in a hard coarse whiteware were found, plus a handle from a Verulamium region flagon, a handle in a fine soft ware, a tiny fine beaker base and a body sherd decorated with notches (Figs 11, 12 and 13 Nos 26, 42, 43, 63, 81 and 82).

In contrast to this, Group 7, late second century in date, did not produce any rims, although it contained 4.1% in whitewares, out of 195 sherds.

Group 8 has been a difficult group to date, but interesting in that its coarsewares indicate a different date to its finewares. The coarse ware percentages are those of the very late second century whilst the finewares, which include a large proportion of white vessels (15.05%) appear to date to the early or mid second century; (see the discussion on Group 8, page 32). Four whiteware vessels are represented, only one, unfortunately, being a rim (Fig 15, 26), apparently part of a narrow-necked jar. The remainder consist of a small fine body sherd decorated with orange barbotine dots (presumed to be from the same type of vessel as recovered from Ditch F10 at Caldecotte, Fig 43,12), four body sherds in a white pipe-clay fabric and seven wall-sherds from a carinated bowl.

After the late second century the level of the whitewares falls considerably. At Wood Corner, Mrs Woodfield came to the conclusion that the whitewares, largely flagons, represented about 5% to 10% of the second-century deposits and noted that they did not occur after the early third century at the latest. In support of this the late second to early third-century assemblage of 126 sherds from Wymbush, Group 9, did not contain a single whiteware sherd, although Group 10 of late second to mid third century date did produce 2.5% in whiteware body sherds. Surprisingly, Group 11, dated mid to late third century contained 11.34% in a pink ware, composed of a considerable portion of a small coarse globular cup or beaker (Fig 18, 12); obviously the fact that this vessel was almost complete does suggest that it was not residual. No other white-pink wares were present. Groups 12 to 17, covering the date range late third to the early fifth century were totally without whitewares, with the exception of mortaria fragments.

Outside the Milton Keynes area, at Towcester in the Alchester road suburb, a similar pattern emerged, although the percentages were generally higher; for example 14% in the period late first to late second, 6% for the period late second to early third and finally 0.9% for the period late third to early fourth century (Brown and Woodfield 1983, 80). This may be due to the fact that Towcester (Lactodorum) was a town and thus received and dealt with more specialised goods and, of course, it was nearer to the source of the vessels, if the majority of them did indeed originate from kilns in the Upper Nene Valley. The map of the East Midlands (Swan 1984, map 14 page 22) showing a profusion of kilns in the Upper Nene Valley adequately demonstrates just how likely this may have been.

Illustrations: To show the range of vessel types. The dates given refer to contexts, unless otherwise stated.

Fig 43 The White and Pink Wares

1. Fabric 18c MK105 (555), mixed dating.
2. Fabric 18c MK105 (437) rubble.
3. Fabric 18c MK44 F.9 G (1), late first to mid second Cent.
4. Fabric 18c MK44 F111 A (1), second Cent.
5. Fabric 18g MK105 (+) topsoil.
6. Fabric 18g MK301 S1 (+) topsoil.
7. Fabric 18b MK313 (+) topsoil.
8. Fabric 18b MK44 F106 A (1), mixed dating but predominantly late second Cent.
9. Fabric 18c MK45 AA T9, predominantly mid to late second Cent.

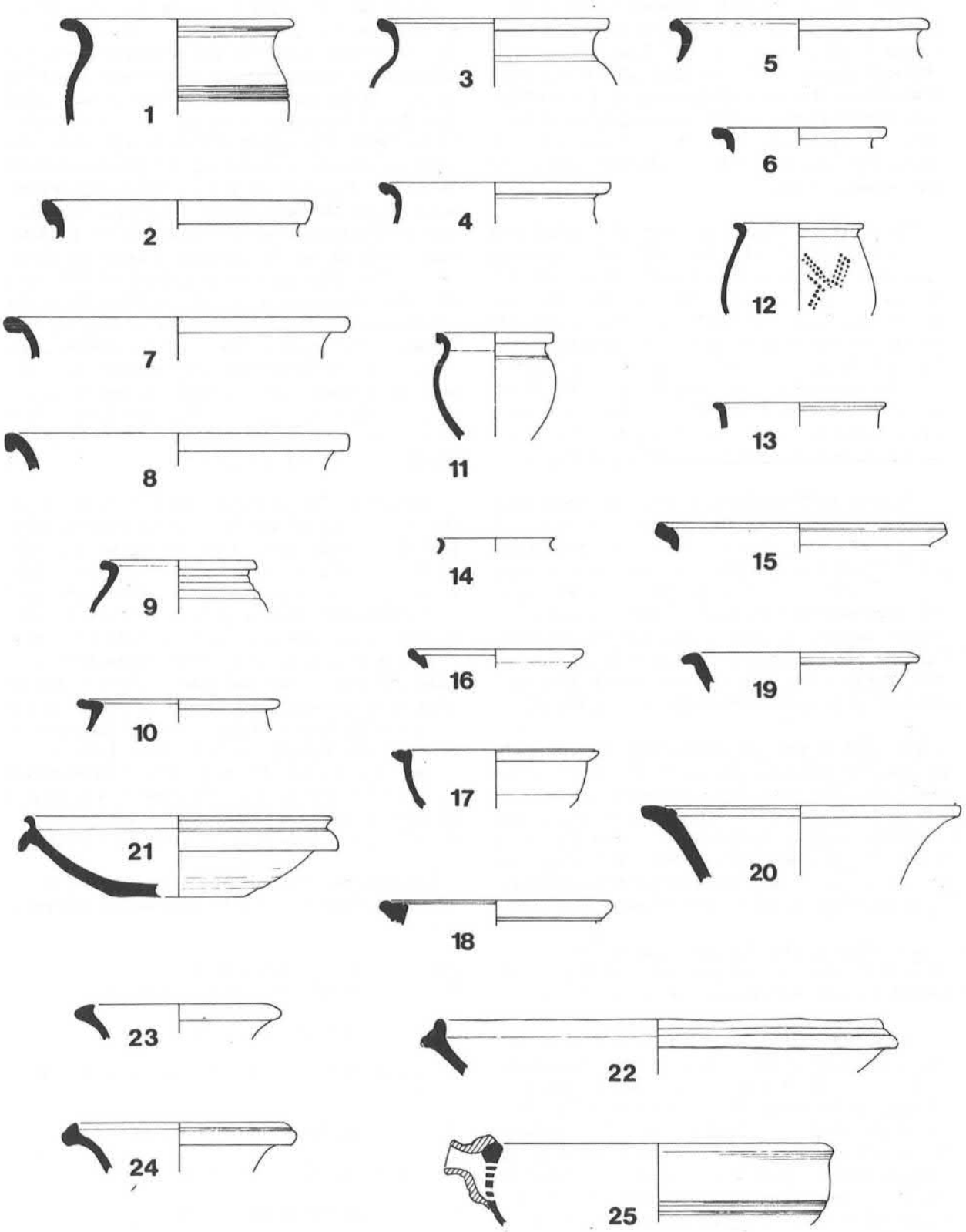

Figure 43: White and Pink Wares, nos. 1–25, (Scale 1:4).

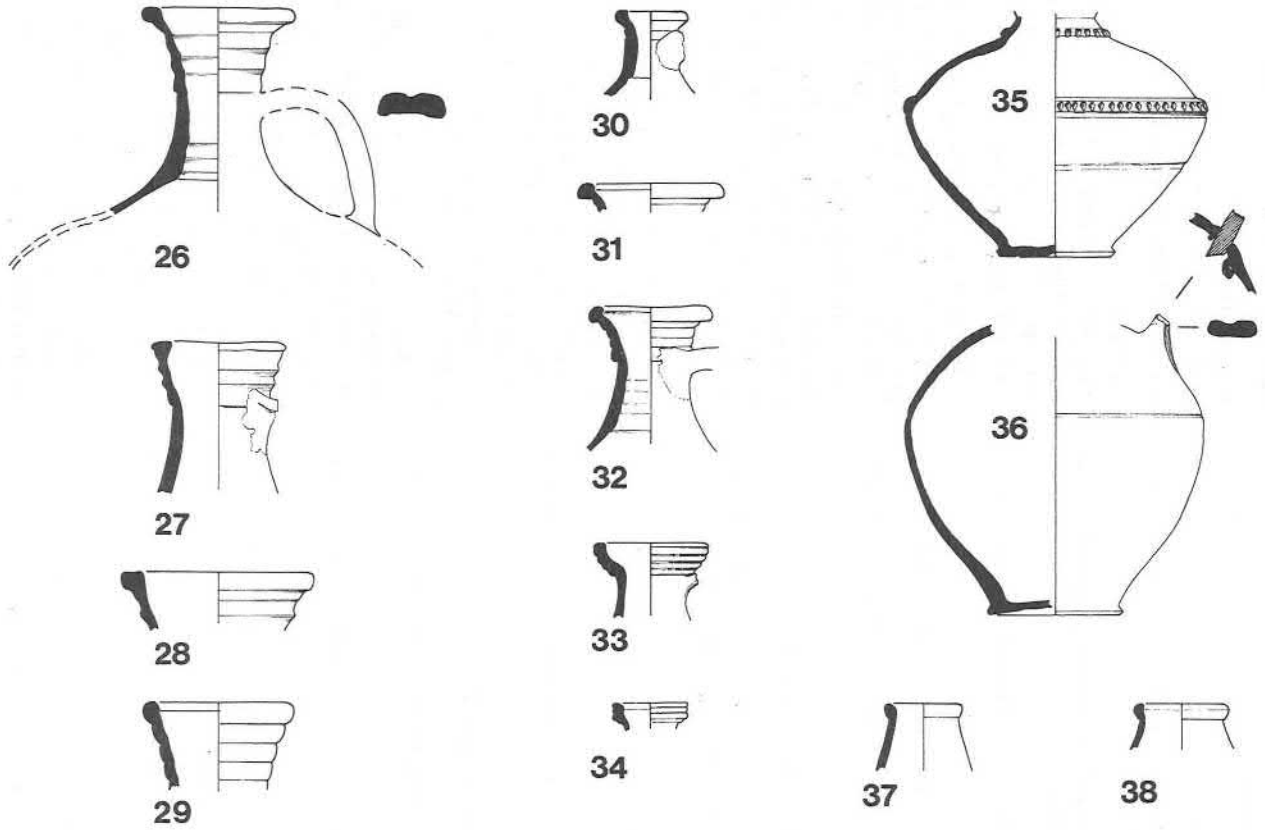

Figure 44: White and Pink Wares, nos. 26–38, (Scale 1:4).

10. Fabric 18c? MK44 F61 A (1), early to mid second Cent.

11. Fabric 18a MK105 (317), first to second Cent.

12. Fabric 18a MK44 F10 G (1), mixed dating, predominantly mid first to early second Cent.

13. Fabric 18a MK45 AA T9, as No 9 above.

14. Fabric 18a MK44 F62 A (1), early to third quarter second Cent.

15. Fabric 18c MK211/6, destruction layer, mixed dating.

16. FGabric 18a MK100 D2, mid/late second to late third/early fourth Cent.

17. Fabric 18c MK44 F91 A (1), early to third-quarter second Cent.

18. Fabric 18c MK297 F55, early to mid second Cent.

19. Fabric 18a MK63 C15, late second to early fourth Cent.

20. Fabric 18c? MK301 S1 (X) topsoil.

21. Fabric 18c MK297 F65, mixed dating, predominantly second Cent. Well potted bowl copying a mortarium form.

22. Fabric 18a? MK45 AA T8, mixed dating; copy of a mortarium 642/form.

23. Fabric 18c? MK44 F40 A (1), late first to mid second Cent.

24. Fabric 18c MK301/45, rubble.

25. Fabric 18c MK44 F165 D (2), mid first to mid second Cent.

26. Fabric 18g MK44 F11 (1), largely second to early third Cent.

27. Fabric 18g MK100 A4 C5, first and second Cent.

28. Fabric 18a MK101 undated.

29. Fabric 18c MK18a F165 E (1), late first to mid second Cent.

30. Fabric 18a MK44 F52 A (1), second Cent.

31. Fabric 18a MK44 F62 A (1) early to third-quarter second Cent.

32. Fabric 18c MK44 L.124, mixed dating predominantly second Cent.

33. Fabric 18c MK63 C.14, late second to early third Cent.

34. Fabric 18a MK44 F186 A (3), mixed dating, predominantly second Cent.

35. Fabric 18c MK44 F186 A (3), as 34 above.

36. Fabric 18c MK44 F9 G (1), late first to mid second Cent.

37. Fabric 18c MK44 F136 (1); second Cent.

38. Fabric 18c MK44 F52 A (2), second Cent.

THE LOWER NENE VALLEY

I Mortaria

See Pages 131–132.

ii Colour Coated Ware Fig 45

Fabric 6

The pottery industry of the Lower Nene Valley was well established by the last quarter of the second century AD, producing fine colour-coated vessels and utilitarian grey wares.

It is perhaps surprising in view of the fact that the Milton Keynes area was well supplied with local greywares that both types were reaching this region in the late second and early to mid third centuries AD, although the greywares are quite fine in comparison to local examples. The import of the greywares ceased after this date whilst the colour-coated vessels continued to reach this area well into the fourth and possibly early fifth centuries.

A typical Lower Nene vessel has a pale coloured core with a contrasting colour-coat. Beakers were the main export in the late second and third centuries, along with Castor boxes. In the fourth century a great many more forms were produced and exported (Howe *et al* 1980, 8). These changes in fashion and demand are well represented in the Milton Keynes assemblages.

One of the first Nene Valley colour-coated sherds from this area was recovered from Group 5 at Caldecotte (early to third quarter of the second century), where it made up 0.26% of 384 sherds. It is possible that the earliest products of the industry were made entirely for export; examples were found in the 'fire' deposit at Verulamium dated 150–155/160 AD (Howe *et al.* 1980, 7), and it is possible that some of the Milton Keynes pieces are of a similar date. The fire deposit at the Bancroft villa, dated to the decade 160–170 AD by the samian, produced 1.96% in colour-coated Nene Valley whilst a similar percentage of 1.13% came from feature F.2 at Wood Corner, dated to the mid to late second century.

Group 7, the occupation layer at MK313, dated to the late second century, contained 1.54% out of 195 sherds, whilst a higher percentage came from the mid to late second-century pit, Group 6, at Woughton; it produced 2.59% out of 847 sherds. A piece of a Castor box (Fig 14, 20) was recovered from Group 7, accompanied by sherds from two beakers. The Woughton pit contained a portion of

a hunt-cup and pieces from two other beakers; it also produced a roughcast 'Cologne' beaker and fragments of a Central Gaulish black-slipped vessel (the group is thus unusually rich in fine wares).

At Wood Corner a late second to early third-century group of sixty sherds in feature F.15 contained 1.66% (one beaker sherd) and site MK304 of the same date with an equal number of sherds produced the same percentage.

Group 8, dated to the very late second century, contained part of a large beaker (Fig 15, 30), heavier and less fine than those in the earlier groups. It equalled 4.3% of the 93 sherds. In contrast Group 9 failed to produce a single sherd in Nene Valley colour-coated ware, although it did produce an exceptional quantity of fine quality greyware thought to be from that region. It also produced some extremely fine Lezoux rhenish beaker sherds, indicators perhaps that 'imitations' were not needed.

The assemblage from the Willen ditch, group 10, dated late second to mid third century contained a large proportion of the upper part of a barbotine-scrolled beaker (Fig 17, 22) with a plain neck, and a beaker with a simple curved rim. The presence of the former distorts the percentage reading to an enormous 12.5%. However, using a norm of three sherds to represent the scrolled beaker the percentage of 4.16% is obtained.

The third-century ditch groups at Wymbush show a different pattern; neither the mid to late third-century Group 11 nor the late third-century Group 12 produced a single sherd in Nene Valley colour-coated ware. These figures contrast greatly with those from Towcester where a group of 490 sherds, found with a coin of the 270's AD, produced 13.53% in NVCC (Woodfield, pers.comm). Such a difference may have been due to the presence of permanent shops in the town, selling specialist wares (Peacock 1982). At Thorplands in Northamptonshire a pit group dated to the mid/late third century contained only 1% in NVCC (Hunter and Mynard 1977) whilst Walton in Milton Keynes, dated late second to mid fourth century, produced thirty sherds in this fabric, most of which was dated by Dr. J P Wild to the late third or fourth century, again indicating a dearth of Nene Valley ware in the middle years of the third century (Wild 1977, 371). Such indications are intriguing, for Nene Valley colour-coated ware of this date has been found in this area (for example the scrolled beaker in the Willen ditch has been dated c. 220–260 AD) and it therefore is interesting to wonder why so little is found in other third-century contexts.

Once into the fourth century the levels of NVCC began to rise. At Wood Corner a small pottery group from the yard surface F30 produced 3.25% in this ware out of 123 sherds, which included an indented beaker and the rims of two possible 'dog-dishes'. Group 13 of early to mid fourth-century date at Wymbush contained 4.51% out of 133 sherds. Mid fourth-century groups produced similar figures: at Wood Corner gulley F.28 contained 3.79% out of 79 sherds, another produced 3.07% and at Wymbush Group 14 produced the slightly lower figure of 2.73%.

However, as the century advanced more Nene Valley colour-coated ware appears to have been traded into the area. Groups 15 and 16, both mid to late fourth-century in date, produced 10.86 and 11.59% respectively, whilst destruction rubble assemblages at Bancroft contained 10.24% out of 1289 sherds and 13.62% out of 1284 sherds. The forms are typically fourth century: thick coarse flanged bowls, flagons/bottles, jars, dog-dishes and heavy Castor boxes. At Stantonbury the topsoil/destruction produced 12.83% out of 343 sherds; this includes the remains of a jar, No 3, decorated with circular bosses dated late fourth to fifth century AD (Howe *et al* 1980, Fig 7, 74).

The last assemblage, Group 17, dated tentatively late fourth to early fifth century, records a drop in the level of this ware to 5.44%; unfortunately there are no other groups of this date with which to compare the validity of this figure.

The suggestion from these percentages is that a steady trickle of Nene Valley colour-coated ware was reaching here from the late second through to the early third century, with a possible slackening in the mid to late third century. This was then followed by an increase in imports from the beginning of the fourth, growing steadily in number throughout that century. The percentage from Group 17 *may* mark the decline of the industry.

It is difficult to match these fluctuations with the economic and social events of the time. The presence of Nene Valley colour-coated ware in a group as early as Group 5 is not a problem, for a stimulus to the industry may have occurred as early as 155 AD when the governor of Germania Inferior and legionary vexillations arrived in the area after major disturbances in the northern frontier area (Howe *et al* 1980, 7) and as already stated these earliest products may have been intended for export. However, the import of Nene Valley colour-coated ware, on however small a scale, during the unsettled years of the late second to early third century is perhaps surprising; all one can suggest is that the quantities would have been greater had the era been less troubled.

After the recovery of Britain by Septimius Severus in the early third century Britain was

peaceful for several decades. Although this does not show itself in the percentages of Nene Valley pottery for this area, at Verulamium (Frere 1972, Fig 131, 1056–1066) in a group dated 200–275 AD there is a preponderance of Nene Valley colour-coated beakers, a sign that perhaps in the wealthier towns at least there existed a demand for such goods. The scarcity of this ware in local assemblages is unexpected, for by the mid third century trade with the continent had all but ceased and Britain was looking inward to supply the desired finewares. It is likely that the choice of pottery in the market square was much reduced compared with that on offer in the second century and far more local or at least British in origin (see table 1), and with this in mind it is difficult to explain why the Nene Valley colour-coated wares are not better represented locally in the third century.

The third century is somewhat of an enigma, with a dichotomy of views as to its state being offered. On the one hand it has been suggested that the towns of the second century were no longer recognisable by the middle of the third (Reece 1981) so deep was the recession: on the other hand Frere (1967, 244) believes that although during the third century emphasis in town planning had shifted to the provision of defensive walls, and no further work on public building is known, there is no evidence for urban decay before the fifth century and that Britain survived the third century with her economy largely undamaged.

The evidence from the pottery, especially a colour-coated ware which can be regarded as a luxury, appears to suggest that in the countryside at least there was a recession, however slight. The lack of colour-coated tableware and profusion of local sand-tempered dishes and bowls over the middle years of the third century may be seen as reflecting a lack of surplus cash with which to purchase the finer quality pottery. This is not the only answer though, for all the third-century groups that record a total absence of Nene Valley colour-coated ware are from the same site and, however unlikely it may be, one wonders whether the percentages merely record a dislike for this type of pottery by the inhabitants of the site.

However, it is possible that by the end of the late third and early fourth century the reorganization by Diocletian had provided a new network of trade and supply and offered a better climate for expansion (Perrin 1981, 450). At around this time the repertoire of the Nene Valley potters was extended dramatically; beakers and 'Castor boxes' were still made but produced with them were imitation samian vessels, plain dishes, wide platters, narrow-mouthed and wide-mouthed jars or bowls, flanged bowls, flagons, jugs and lids (Perrin 1981, 447–463). Many such vessels were found in the later groups and in the destruction rubble and topsoil at the Bancroft villa and Stantonbury. Such material demonstrates that the Nene Valley colour-coated pottery found in this area reflects the changing demands of fashion and function within that industry but whether it can also be said to mirror the economic fluctuations of the period cannot rightly be judged.

The illustrations show the range of vessel types. The dates given refer to contexts, unless otherwise stated.

Fig 45 All Fabric 6

1. MK105 (486) rubble.
2. MK105 (381) rubble.
3. MK301 S1 F125, rubble and mortar spread, predominantly fourth Cent.
4. MK105 (126) rubble.
5. MK63 unstratified.
6. MK44 F186 A (1) mixed dating, predominantly second (to early third Cent. in upper layer).
7. MK105 (35) rubble.
8. MK105 (184) topsoil.
9. MK105 (205), fourth Cent, probably post-350.
10. MK105 (23) topsoil.
11. MK105 (205), as No 9 above.

12 and 13. MK44 F186 A (1), as No 6 above.

14. MK250 (795) residual in a grubenhaus.
15. MK105 (437) topsoil.
16. MK301 S1 (+) topsoil.
17. MK105 (426) topsoil.
18. MK105 (358) early fourth Cent.
19. MK105 (463) early fourth Cent.
20. MK44 F108 (1) C and B, mixed dating, predominantly late first to late second Cent. with late Roman, Saxon and Medieval in the upper layers.
21. MK105 (472) topsoil.
22. MK105 (27) topsoil.
23. MK301 S1 (+) topsoil.
24. MK105 (404) topsoil.

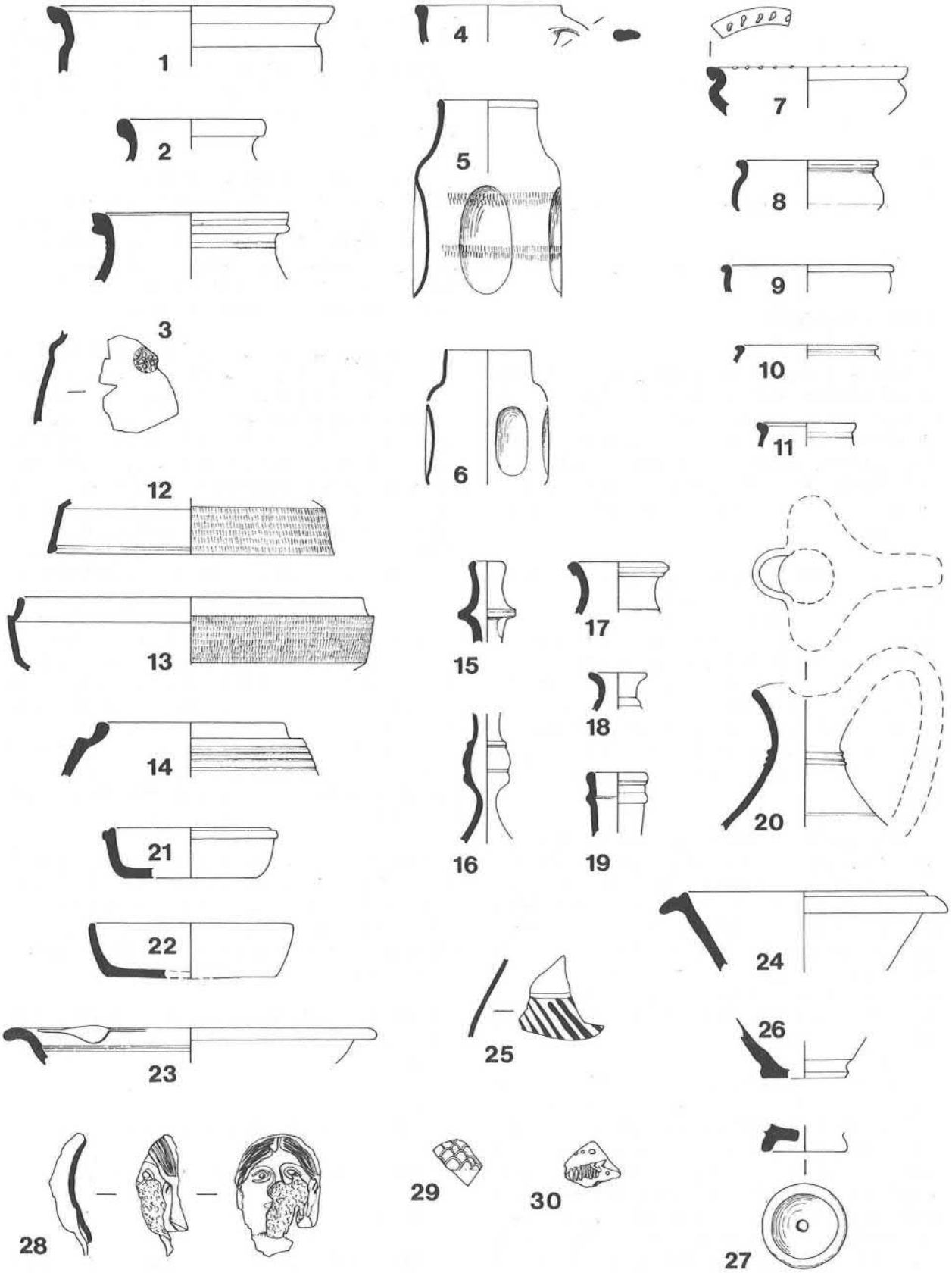

Figure 45: Lower Nene Valley Colour Coated Ware, Fabric 6, (Scale 1:4).

25. MK100 D2, mid/late second to late third/early fourth Cent.

26. MK297 F31 late second to fourth Cent.

27. MK100 D2, as No 26 above.

28. MK100 D2, as No 25 above.

29. MK45 AA T9 predominantly mid to late second Cent.

30. MK301 S3 F7 (11), Building 1, early to late second Cent.

iii Greyware Fig 46

Fabric 12
A typical Lower Nene Valley greyware (from hereon called NVGW) is largely distinguishable by its white fabric and grey surfaces. Such traits have allowed it to be recognised in local contexts; these date from the mid to late second through to the early third century AD. Pieces found in the later groups, ie Groups 13 and 16, are believed to be residual.

NVGW appears to have been in production from the second quarter of the second century AD, as indicated by the discovery of a quantity of this ware in association with samian of this date from the kilns at Orton Hall Farm, Normangate Field, Monument 97 and Chesterton (Howe *et al* 1980, 7). Such a date predates that of the earliest excavated colour-coated kilns. The greyware continued in production until c. late third to early fourth century when it was replaced by the coarser colour-coated material.

Although the NVGW was produced earlier than the colour-coated vessels it is probable that the two reached this area simultaneously, the grey-ware perhaps being included to make up a load or, being essentially utilitarian in form, to complement the finer colour-coated beakers and Castor boxes. It was probably saleable in an area of established industries by virtue of its finer quality; indeed it is likely that only the finer greyware pieces were offered for export at all.

The earliest examples of this ware found locally came from Group 6, the rich mid to late second-century group from Woughton. The pieces equal 1.42% of the 847 sherds and are composed of a triangular-rimmed bowl (Fig 11, 25) and a straight-sided dog-dish (Fig 12, 33) with an internal groove at the junction of the base and wall, a fashion used by both the Upper and Lower Nene Valley potters (Johnston 1969, Fig 7, 43 and 44 and Howe *et al* 1980, Fig 2, 19, respectively).

Group 7, late second century in date, also produced the rim of a triangular-rimmed bowl or pie-dish (similar to Fig. 14, 4) and a handful of body sherds; these equal a fairly generous 3.08% of the 195 sherds. Within Group 8, of very late second century date, the percentage has again fallen, to 1.075% of 93 sherds, composed of a single pie-dish rim, (Fig 15, 5); this appears to have been a most popular form.

The percentage within the next group, Group 9 from Wymbush, dated late second to early third century, is exceptional. Here NVGW equals 12.7%, composed of a possible five vessels represented by three different bases and various body sherds, some of which came from a jar, which may or may not join with one of the bases.

Surprisingly within Groups 10 to 12 NVGW is not found at all. It may be that, as with the Nene Valley colour-coated ware, the greywares suffered a decline in the third century. This is not to say that they are entirely unrepresented in the third century, for flanged bowls are occasionally found. This greyware form is uncommon in the Nene Valley and must soon have been superseded by the more popular colour-coated version. It has been dated third to early fourth century (Howe *et al* 1980, Fig 2, 21) and in our area has been found in Ditch D2 at Sherwood Drive (a feature which contained a good deal of early third-century East Gaulish samian), Feature F103 at Stantonbury MK301, dated second to fourth century and Bradwell Abbey Barn, a site of late second to early fourth century date (Nos 8, 9 and 10 respectively). The latter site also produced a wide-mouthed necked bowl, No 2, in Fabric 12 also probably of third century date although not identical in form to published examples (Howe *et al* 1980, Fig 1, No 4, 8 and 10).

After the late third/early fourth century, NVGW was no longer produced (Perrin 1981, 450). Most of its standard utilitarian forms were then made in colour-coated versions and it is these, unlike their greyware predecessors, which were able to make a sizeable impact on the markets in this area.

The illustration show the range of vessel types. The dates given refer to contexts, unless otherwise stated.

Fig 46
1. MK44 F11 (1) largely second to early third Cent.

2. MK63 C.14 late second to late third Cent.

3. MK45 A/A T2 second to fourth Cent.

4. MK44 F186 A (3) mixed dating, predominantly second Cent.

5. MK45 unstratified.

6. MK211/81 late second to early third Cent.

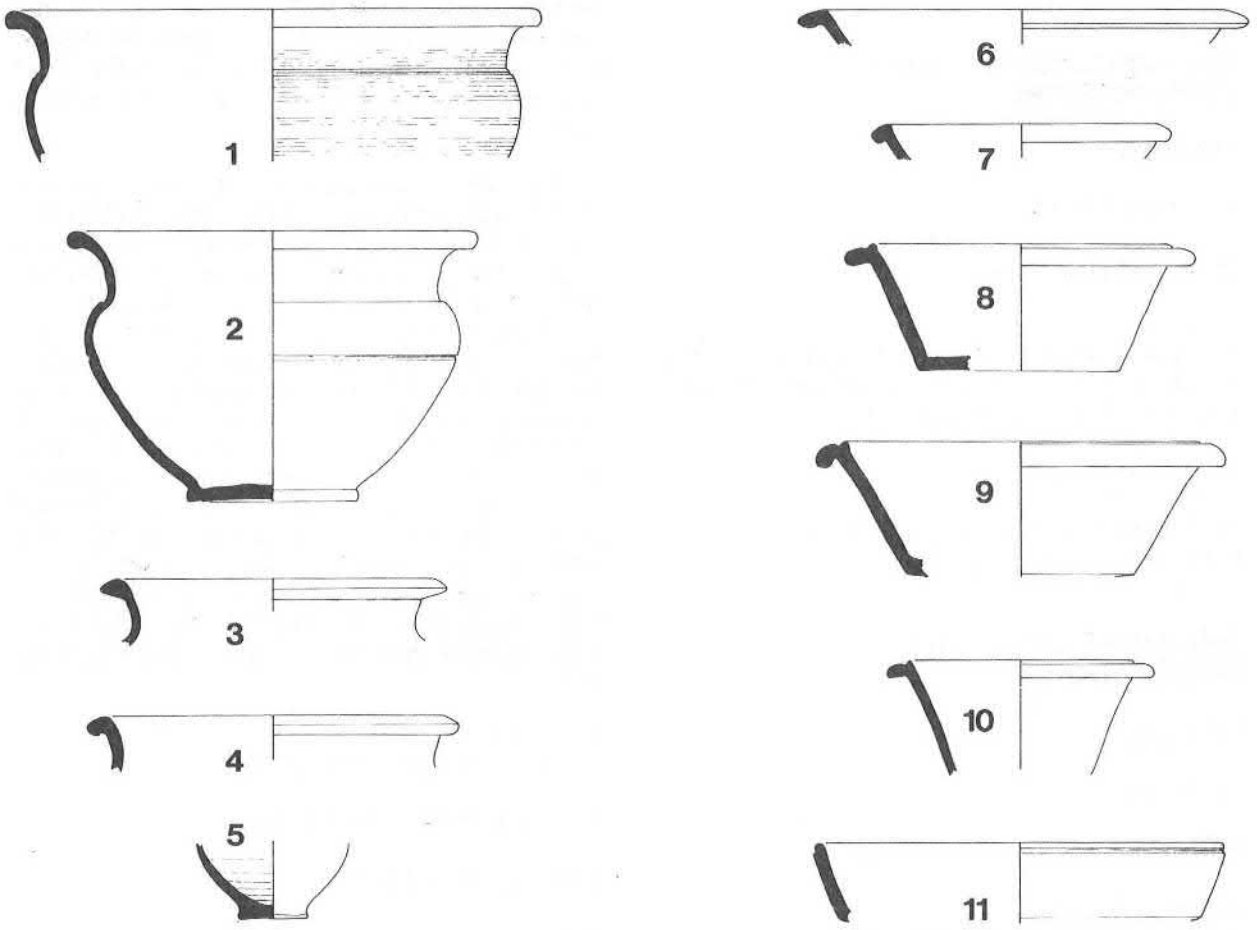

Figure 46: Lower Nene Valley Greyware, Fabric 12, (Scale 1:4).

7. MK211/31 topsoil.

8. MK100 D2 mid/late second to late third to early fourth Cent.

9. MK301 S1 F103 second to fourth Cent.

10. MK63 C27 late second to late third Cent.

11. MK44 F53 A (1) first to late second Cent. See also Fig 41 no 22.

iv White and Pink Ware

?18b
See Pages 131–132.

THE VERULAMIUM REGION, HERTFORDSHIRE

i Mortaria

See Pages 131–132.

White and pink Ware

Fabric 18g
This fabric, which is provisionally assigned to Hertfordshire, is discussed with similar wares from the Upper Nene Valley on page 112.

Illustrated Forms

See Fig 43, Nos 5, 6, and Fig. 44, 26 and 27.
See also Fabric 18c, Fig. 43.

THE HADHAM INDUSTRY, HERTFORDSHIRE

i Mortaria

See Pages 132–133.

ii Greyware Fig 47

Fabric 36
To date only two definite Hadham greyware vessels have been found within the city, both unstratified. In size and finish they are very different, although both are Class A.14 vessels; bowls with rounded profiles, decorated with bosses, either plain or with a single groove demarcating the edge, and dimples (Roberts 1982). The larger of these vessels, No 1, was found in 1973 at the Bancroft villa, MK105. It has a fine black slip, burnished in a linear fashion, like much BB1. The bosses are demarcated with a single groove. Unfortunately not enough pieces were found to indicate the number of dimples present. In section the surfaces are seen to be medium grey in colour with a core of reddish-brown.

The second vessel, from Wood Corner MK64, No 2, is much smaller. The fabric is yellowish-grey with patches and streaks of black on the exterior face; whether these are the remnants of a slip it is not possible to say. Both remaining bosses have a faint demarcating groove whilst between them there are six dimples arranged in a pendant triangle.

These types of vessel come under the term 'Romano-Saxon', but this does not necessarily imply Saxon origin or influences. The term, like 'Belgic', is used only to suggest pottery type and decorative motifs. As defined by Roberts (*op. cit.*) Romano-Saxon pottery is a wheel-made ware produced in standard late Romano-British fabrics, decorated with grooves, bosses, dimples and depressions in the wall of the pot (occasionally other decorative devices are used with one or more of these).

Originally it was argued that the decoration was of a Germanic/Teutonic style (Myres 1956) but Frere (1963) suggested that the type might have a respectable native pedigree and Gillam (1979) suggested that the similarity of Saxon decoration to the 'Romano-Saxon' motifs was due to the Anglo-Saxon potters copying Romano-Saxon originals. Roberts concluded that there were no simple answers to explain the derivation and development of all the variations of Romano-Saxon pottery; most were probably derived from Roman antecedents in pottery, silver or glass, while a few were derived from handmade Germanic pots. It is probable that traffic in ideas between the Roman empire and the free German tribes at this time would have gone in both directions, a notion that the study of Romano-Saxon pottery appears to support (Roberts 1982, 167).

Fig 47, 1–2
1. Fabric 36 MK105 (2) topsoil

2. Fabric 36 MK64 unstratified

iii Orange ware Fig 47

Fabric 37
This is a fairly distinctive fabric, deep-orange or red-orange in colour, with well preserved sherds retaining a good slip and burnish. Under a microscope the typical Hadham product will show a 'salt and pepper' effect, made by the abundant minute black and white inclusions.

The Hadham pottery industry began in the Iron Age, but the vessels appear to have been widely traded only in the fourth century AD. The earlier industry has been discussed by Rodwell (1978); it relied heavily on 'stamping' for decoration. This appears to have stopped during the Trajanic/Hadrianic period. It may be after this date, towards

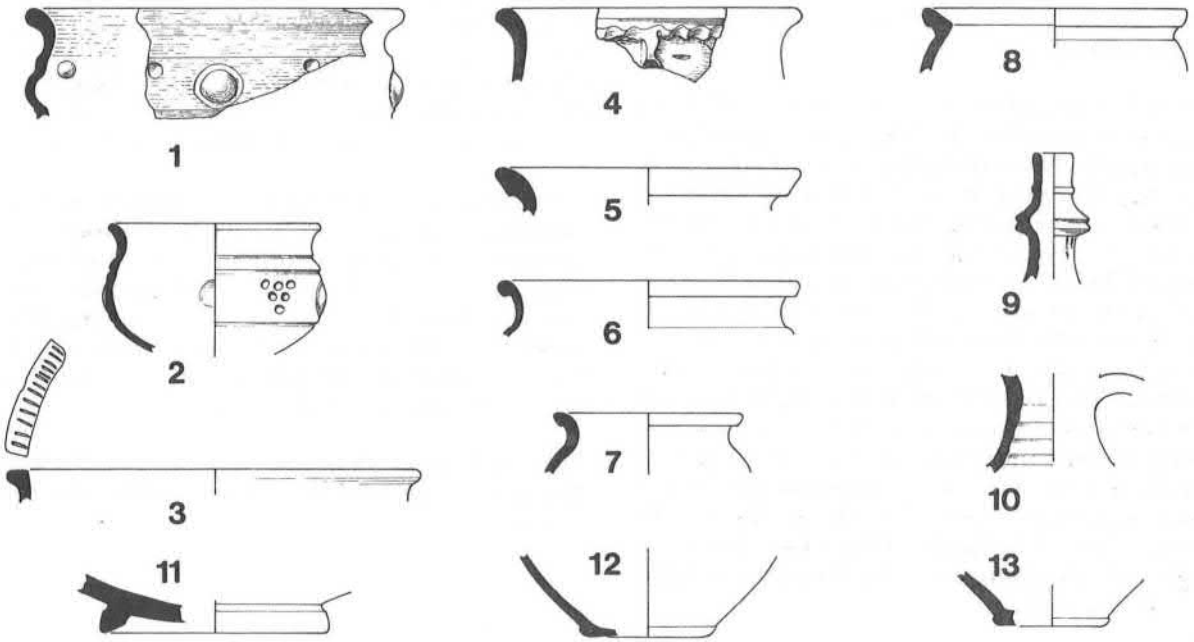

Figure 47: Hadham Greyware, Fabric 36, nos. 1–2, Hadham Orange Ware, Fabric 37, nos. 3–13, (Scale 1:4).

the middle or late second century, that the potters turned their hands to following fashionable forms, such as samian and cornice-rim beakers (Unpublished lecture, Chris Going), and the linear burnishing can perhaps be seen as an attempt to copy the lustre of samian. In Rodwell, vessels copying the samian form Dr 37 can be seen (Rodwell 1978, Fig 7,16, 120) dated to the Antonine period on the evidence of form. Similarly one of the vessels (Fig 11, 22) from the Woughton pit Group 6 (mid-late second) resembles a Dr. 18/31. The latter has been seen by Chris Going (report on the Hadham kilns forthcoming) who believes that it was probably a Hadham product; obviously this implies some trading to this area during the earlier industry.

No Hadham stamp-decorated pottery has, to date, been found in this area. As noted above, this type of decoration had died out by the end of the Hadrianic period and it is therefore assumed that the Milton Keynes 'early' Hadham products arrived after this date (c.138 AD) and before the temporary decline of the potteries at the end of the second century.

Sherds with a white or cream slip from Hadham are not as common as their red/orange-slipped counterparts. Those that have been found are from small flagons found in second-century features. A dark red-orange handle and neck sherd with the remains of a thick white slip was recovered from feature F30 E (1) at Caldecotte, dated early in the third quarter of the second century AD. The sherd, No 10, is badly worn but shows traces of fluting down the outer face. The other example (not illustrated) is from Group 8 at Woughton, dated very late second century, but the sherds probably belong to the earlier phase of this assemblage (see discussion page 32). These bright orange pieces with a cream slip are from the side of a flagon with the lower end of the handle still in place. It was not tanged; c.f. the Skeleton Green flagons (Partridge 1981, Figs 95–96).

Caldecotte also produced some later Hadham material, for example the red-slipped bottle neck (No 9) from feature F187. The type, with a grooved box-flange, is probably similar in date to the Oxford C.10, dated ?240–400+ (Young 1977, 150). There are some irregular scored marks beneath a section of the flange which may have helped key in a handle. At Little Woolstone MK109 a fine shouldered jar or necked bowl (No 6) came from a first to second-century ditch cut by a fourth-century pit (a date range similar to F187 above).

Some of the Hadham body sherds were stratified. At Wymbush MK211 one small deep orange sherd, streaked with black, came from the same feature as a fine Alice Holt rim, type 4–42, dated 270–350 AD (Lyne and Jefferies 1979); whilst two body sherds, one dark orange-red and the other dark-red on the inside half of the sherd and grey through the outer half, slipped with dark grey (possibly the results of being burnt on the outside?) were recovered from Group 14, a safely stratified feature of around the mid fourth century AD. Three other body sherds, probably but not certainly from Hadham, were also recovered from this feature; together the five sherds make up 2.73% of the 183 sherds.

A mortarium and a jug rim came from Group 17 (Fig 23, 33 and 30 respectively), dated to the late fourth/early fifth century, at Bancroft; the mortarium is very similar to the Oxford type C.100 dated AD 300–400+ whilst the jug remnant (with a dimple on the handle top) looks like the Oxford form C.13.2 dated AD ?350–400+ (Young 1977, 150).

However, most of the sherds of the later industry have been recovered from topsoil and destruction rubble and, as with Alice Holt material, this may be indicative of a late date. The face-pot (No 4) was a stray find from the Bancroft villa MK105, whilst the jar/bowl with the notches along the rim (No 3) and the other bowls/jars (Nos 7, 8, 11 to 13) from the same site were also unstratified.

Hadham ware was found in quantity at Verulamium (Geddes 1977). It is possible that throughout the production period of the Hadham kilns large towns like Verulamium and Camulodunum were used as trading centres; in this manner the vessels found in Milton Keynes may have arrived from the kilns via Verulamium, the Watling Street and Magiovinium.

The illustrations show the range of vessel types. The dates given refer to contexts, unless otherwise stated.

Fig 47, 3–13

3. Fabric 37 MK105 (437) topsoil.
4. Fabric 37 MK105 (+) topsoil.
5. Fabric 37 MK109 (+) topsoil.
6. Fabric 37 MK109/39, first and second Cent ditch cut by fourth Cent pit.
7. Fabric 37 MK105 (85) topsoil.
8. Fabric 37 MK105 (437) topsoil.
9. Fabric 37 MK44 F187 late first to late second Cent. with late Roman contamination.
10. Fabric 37 MK44 F114 A (1) second Cent.
11. Fabric 37 MK105 (437) topsoil.

12. Fabric 37 MK105 (3324) late third to early fourth Cent.

13. Fabric 37 MK105 (162) topsoil.

OXFORDSHIRE

Owing to the extensive publication of this material (Young 1977) it was felt unnecessary to duplicate the illustrations thus only pieces of unusual form are presented.

i Mortaria

See Pages 130–132.

ii Parchment Ware

Fabric 5

Although Parchment ware was never produced in quantity at the Oxford kilns it had a wide, though sparse, distribution (Young 1977, 80). To date the rims of only nine P.24 type bowls have been found in Milton Keynes, largely from topsoil and destruction rubble contexts. By analogy to Alice Holt material, which is frequently found in such contexts, the Oxford parchment wares could date to the second half of the fourth century AD or later. However, the Wymbush P.24 rim was recovered from topsoil in which the majority of the pottery belonged to the late third century AD.

The dominance of the P.24 type bowl is as expected, whilst the absence of the P.9 jar, which is found elsewhere in Buckinghamshire and in the neighbouring counties of Bedfordshire and Northamptonshire, is surprising (Young 1977, 272).

iii Colour Coated Ware

Fabric 24

The exact date for the start of production of this fine tableware is not entirely certain; it had certainly happened by about 270 AD at the latest and may have been as early as 240 AD (Young 1977, 238). Trade into this area may have swiftly followed its inception due to the good road system that linked the two regions.

The earliest possible examples from Milton Keynes came from Group 10 at Willen, dated late second to mid third century. It produced two red-and-brown slipped Oxford body sherds, 1.66% of the 120 sherds. These suggest three possibilities: firstly that the group is incorrectly dated and that the date ought to be extended at least to the late third century; secondly, that they are contamination or, thirdly, that the Oxford colour-coated industry was not only producing but widely marketing its wares, in small quantities, by c. 250 AD.

The first possibility is contradicted by the rest of the pottery assemblage. The fairly low shelly and high greyware percentages are both suggestive of the early to mid third century, whilst the level of the soft pink grogged ware is also low and suggests a date in the late second century. The second possibility, that of contamination speaks for itself and is perhaps the most plausible. The third possibility would imply that within ten or twenty years following the start of production an Oxford vessel had reached this area, been purchased, used, broken and discarded near the Willen ditch. This, of course, is not impossible, but allowance must be made for the fact that the colour-coated wares may not have been of much importance before c. 270 AD (Young 1977, 239) which tends to suggest that they were not likely to have been widely traded before that date.

The mid to late third-century Group 11 at Wymbush contained a single Oxford colour-coated rim (0.51% of 194 sherds), that of a C.45 (Fig 18, 7). At this date the range of forms produced by the Oxford potters was limited but it did include a number of bowls imitating East Gaulish samian types such as the C.45 Dragendorff 31 copy. It also produced six sherds of a vessel originally thought to be Oxford, now labelled 41f, but there is still some uncertainty as to its proper designation. If it is an Oxford product the form would be unusual (Fig 18, 8); it would also raise the Oxford percentage for this group to 3.6%.

The late third-century Group 12 from Wymbush produced 175 sherds, 4% being Oxford colour-coated ware. The one rim (Fig 19, 5) was that of a hooked C.44. The topsoil pottery from Wymbush, also mainly late third-century in date, contained 5.39% in Oxford colour-coated ware out of 297 sherds; the recognisable pieces being those of a C.45, W.C.3 and a possible C.74.

About 300 AD there was an increase in the range of forms produced by the Oxford potters, reflected by a rise in the percentages for Fabric 24. The early to mid fourth-century Group 13 at Wymbush contained 13.54% (or 14.29% with the addition of the C.97–C.100 mortarium body sherd) of 133 sherds, composed of a C.75, the upper rim fragment of a C.51–54 or C.94, an unusual cup form, a C.20? rim and a stamp-impressed beaker sherd (possibly from a C.30).

The 183 sherds from the mid fourth century Group 14 at Wymbush included 15.85% in colour-coated Oxford ware (17.49% with the addition of the Oxford C.97–C.100 mortarium sherds) composed of a C.68, C.75 (Fig 21, 3 and 4), the upper part of a C.51–54 and a quantity of body sherds. Surprisingly another feature of similar date, MK211/76, did not contain a single Oxford sherd. However the group was composed of only 31 pieces, obviously too small a sample to be of much value. It was relatively securely dated by an Alice

Holt rim and the late Nene Valley ware that it contained.

The two mid to late fourth-century groups, 15 and 16, produced dissimilar percentages, possibly also owing to the small size of the samples. In Group 15 the 46 sherds contained the large quantity of 19.56% in orange Oxfordware (excluding mortaria), composed of a C.51 and possibly a C.8, whilst Group 16 contained 14.48% composed of C.51 and a C.49. Similar percentages to these were obtained from the topsoil destruction layers at the Bancroft villa: 14.42% and 13.78% of 1289 and 1284 sherds respectively. At Stantonbury the topsoil level was 15.16% out of 343 sherds.

The latest group, Group 17, thought to be late fourth to early fifth century in date, produced 10.2% in Fabric 24 out of 147 sherds. For such a late date the fairly generous percentage is not totally unexpected because although some of the Oxford kilns may have ceased about or shortly after the middle of the fourth century, the Baldon and Phase 4b kilns at the Churchill continued well into the late fourth century (Young 1977, 240). A more varied selection of forms were present in this latest group – a C.16, C.45, C.46, C.68 and a C.75.

Throughout the Oxford colour-coated production period the percentages for the ware in this area are fairly high for vessels that had to be transported overland some 80 kilometres from their place of production. Young (1977, 238) discusses the type of marketing arrangement that must have existed which enabled the potters to trade their wares so widely and in such quantities. He considers that the organisation must have involved middle-men (rather than the potters peddling their own wares) and that it is likely that the pottery was distributed through the major centres of population. To reach this locality the Oxford pottery was presumably brought along the Alchester road to Towcester, from whence its purchase, either by local traders or inhabitants of the area, could have been accomplished with ease.

iv Oxidized Oxford Ware

Fabric 35
Only one sherd in this fabric has been recovered. This is a bag-beaker rim, in the finer version of the oxidized Oxford fabric. It was unfortunately an unstratified find from the Roman site at Walton (Mynard and Woodfield 1977, 370 and Fig 6, 98). It has been positively identified by Dr. Christopher Young who notes (Young 1977, 189) that this type of pottery was not usually traded widely; it is perhaps significant that the other two find-spots of this ware, away from the production area, were also in Buckinghamshire, at Saunderton and North Marston (Young 1977, 344).

MIDDLESEX

i Lead Glazed

Fabric 13
See Lead glazed wares page 136.

WARWICKSHIRE

i Mortaria

See Pages 131–132.

C: OTHER BRITISH WARES

LINCOLNSHIRE

i Mortaria

See Pages 132–133.

DORSET

i Black burnished Ware I Fig 48

Fabric 8
Black-burnished ware, BB1, as produced by the Durotrigian potters, had come to the notice of the Roman army in the early years of the conquest. As the army only rarely made its own pottery BB1 became the normal cooking ware in the Claudian and Neronian establishments in Dorset; it has also been found on sites of similar date outside Durotrigian territory, as in the fortlet at Old Burrow, N. Devon and the fort at Usk, Monmouthshire (Farrar 1973, 87). After c. 120 AD, the Durotrigian potters captured the military markets of the north and west and also began to trade with the civilian markets in south-central England and the west and central Midlands (Gillam 1976, 57); for example at Shakenoak, Oxfordshire, BB1 was found in every period of occupation (Brodribb *et al* 1971, 51). Whether this remarkable distribution was due to a military contract or merely to military stimulus has not been proved (Peacock 1982, 149), but whatever the reason only in the south-east did sales fail to overwhelm local competitors (Frere 1967, 293). Gillam (1976) produced maps indicating that Milton Keynes was on the periphery of these markets and thus, when BB1 occurs at all, the percentages are small.

The earliest find of BB1 from this area was recovered from the Group 7 occupation layer, dated to the late second century. Here is comprised 1.025% of 195 sherds. This percentage was made up of two small sherds, one of which may have come from a cooking pot. The pottery from the small group 8, dated very late second century also included some BB1, a single body sherd which equalled 1.075%.

It is interesting that this ware was so late in arriving in this area; it may be that elsewhere such was its commercial success (it formed between 30–60% of the yield of coarse pottery from all kinds of sites by this time) that by the third quarter of the second century a trickle reached even this peripheral area (Gillam 1976).

Group 9, dated late second to early third century, produced the fairly large quantity of 3.97% in BB1 out of 126 sherds. This is composed of a grooved rim bowl (Fig 16, 3), the base of a cooking-pot and a body sherd decorated with acute latticing (Fig 16, 10). Other sites with features of a similar date also produced BB1; the ditch T9 at Holne Chase contained a dog-dish rim (No 3), a sherd with lattice decoration and three plain body sherds; Ditch D2 at Sherwood Drive produced a grooved-rim bowl (No 7) and some later BB1, whilst at Caldecotte feature F11, largely second to early third century in date, produced five sherds from a grooved-rim bowl, the rim of an arcaded dog-dish and part of a cooking-pot. All of this would seem to indicate that in the late second to early third century BB1 was widely but sparsely found throughout the area.

Features of third century date are not as common as those of the earlier phase, thus it is difficult to be so definite with regard to the quantity of BB1 most likely to be recovered from this period. Group 10, the Willen ditch dated late second to mid third century produced 1.65% out of 120 sherds; both sherds were part of the same vessel and appear to be early third century in date. At Wymbush the mid to late third-century Group 11 did not produce any BB1, whilst at Wood Corner a feature of the same date F22 contained a single grooved-rim bowl. At Bradwell Abbey Barn, a site late second to early fourth century in date, and thus predominantly third, only the rims of two dog-dishes were recovered.

This paucity of BB1 is not echoed at Towcester, just 12 to 13 kms north of Milton Keynes along the Watling Street (Brown and Woodfield 1983, 79). Such differences may have occurred because marketing was aimed at the larger permanent centres of residence, as the town of Lactodorum may have been; this is supported by the Towcester finds but not by the level of BB1 at Magiovinium (Parminter in Brown and Woodfield 1983). Peacock (1982) suggests that the permanent towns and shops were specialised outlets (for BB1, samian, mortaria etc.), whilst the coarse wares were distributed by the potters, perhaps at the pottery, or sold by itinerant merchants or pedlars or through periodic fairs and markets. Perhaps Magiovinium was little more than a large village, distinguished by its local market and important as a staging-post on the Watling St but nevertheless insubstantial. The other possibility of course is that the considerable quantity of BB1 in Towcester is somehow related to an official presence, (or perhaps the building of the defences in the 170's A.D: C. Woodfield, pers. comm.), but there is no evidence for this.

Once into the late third century, BB1 appears in the local assemblage more frequently, although again at a low level. The only exception to this came from Shenley Road, Bletchley where, of the forty-four rims sherds found, five were composed of BB1. This quantity was made up of four different flanged bowl rims and one probable jar fragment. The site at Walton, late second to early fourth century in date also produced the rim of a flanged bowl; at Wood Corner feature F30, dated to the fourth century, contained a body sherd from a BB1 dog-dish; whilst at Wymbush single body sherds came from late third-century Group 12 and the early to mid fourth-century Group 13. Sherwood Drive ditch D2 produced BB1 of varying date; a grooved-rim bowl (No 7) represents the late second/early third-century period whilst the late third to fourth century is represented by a cooking-pot, a dog-dish and a flanged bowl (Nos 2, 6 and 8 respectively).

Sites outside the city also show a greater BB1 presence from the late third century to the early fourth century; in the Nene Valley for instance it is recorded for the first time at this date (Perrin 1981, 450) and at Quinton the only BB1 found was of a mid to late fourth-century date (Friendship-Taylor 1979, 104). Such finds may give credence to the suggestion that from the middle of the third century to the middle of the fourth the BB1 industries in Dorset and elsewhere expanded their trade into civilian markets in Midland and south-eastern England (Gillam 1976, 59). However, despite this expansion the percentages remain very small, indicating the strength of the local industries. At Brixworth in Northamptonshire for instance no BB1 at all was found but, as is the case in Milton Keynes, numerous imitation burnished black flanged bowls and dog-dishes were recovered (Woods 1977, 70, 11 to 15).

In summary there appear to have been two main phases of BB1 importation into the area; the first in the late second to early third century - an unsettled period – and the second in the late third. The first phase *may* relate to the movement of the military along the Watling St in response to the various troubles or it may be purely commercial; whatever the reason it may be directly related to the slight decline of the local grey/black sand-tempered wares at this time. The later expansion has been linked, at least in part, to the attempt by the BB1 industry to counterbalance the loss of the northern markets (Farrar 1973, 91); a tactic which appears to have met with at least some measure of success.

The illustrations show the range of vessel type. The

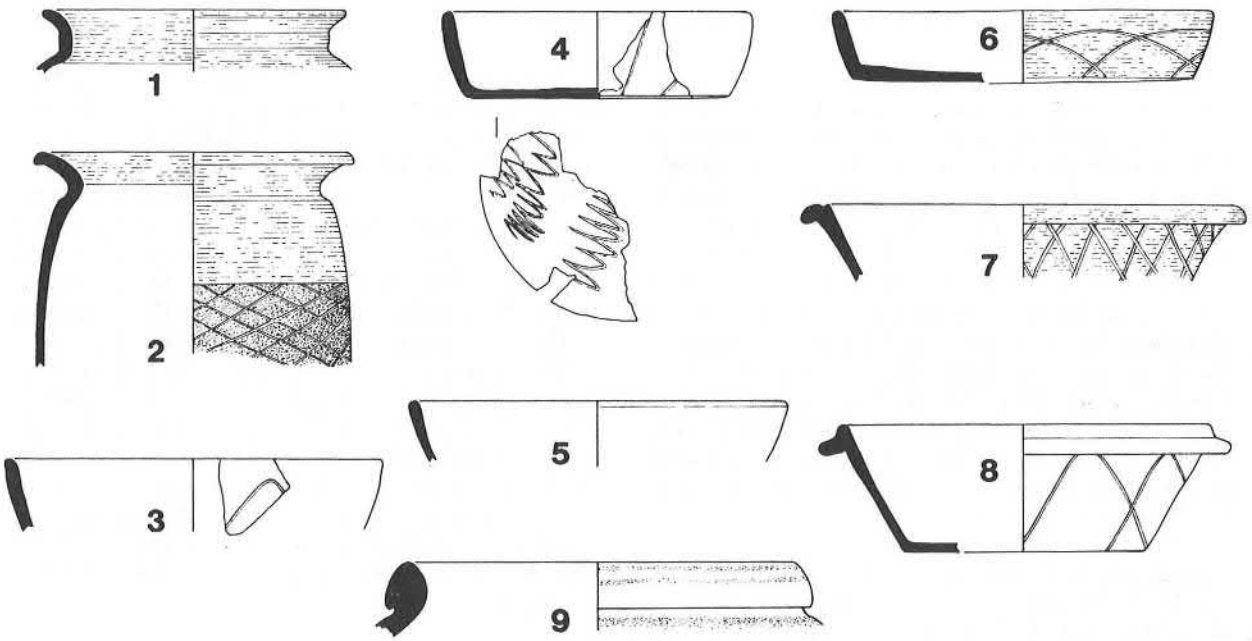

Figure 48: Black burnished ware, (BB1) Fabric 8, nos. 1–8, Alice Holt/Farnham Ware, Fabric 31, no. 9, (Scale 1:4).

dates given refer to contexts, unless otherwise stated.

Fig 48, 1–8.

1. MK105 (75) rubble.
2. MK100 D2 mid/late second to late third/early fourth Cent.
3. MK45 AA T9 predominantly mid to late second Cent.
4. MK45 AA T2 second to fourth Cent.
5. MK63 C7 late second to late third Cent.
6. MK100 D2, as No 2 above.
7. MK100 D2, as No 2 above.
8. MK100 D2, as No 2 above.

ESSEX

i Colchester Colour Coated Ware (Not illustrated) See Page 137.

SURREY

i Alice Holt/Farnham Ware Fig 48

Fabric 31

Only three rim sherds and a body sherd from Milton Keynes have been positively identified as Alice Holt material, although as a greyware it is possible that pieces may not have been recognised.

Wymbush produced some Alice Holt sherds, possibly from the same vessel, although from different contexts. The rim sherd, No 9, is a type 4.42, a storage jar with a vertical bead rim (Lyne and Jefferies 1979,Fig 30). Malcolm Lyne has dated it to 270–350 AD. He noted that this particular vessel is unusual in that the rim is not slipped whereas the body is. He also says that its presence at Wymbush is unexpected, in that most Alice Holt fragments this far north are of very late fourth or early fifth century forms. It came from a ditch section (MK211/76) which contained 30 other sherds. This group can be dated by the preponderance of shelly ware (Fabric 1) which makes up 38.71%, a total suggestive of the mid fourth century or later. The group also contained a body sherd of orange Much Hadham ware and the rim of a heavy Nene Valley straight-sided dish.

An Alice Holt body sherd, which may be part of the vessel mentioned above, came from the mid fourth-century Group 14. This sherd has comb decoration (Fig 21, 14). The same feature also produced a greyware sherd with the remains of a black and white slip; this may also be from the Alice Holt kilns. These two sherds comprise 1.09% of the 183 sherds in Group 14.

Group 16, a small assemblage of 69 sherds from Caldecotte, dated mid to late fourth century, produced the rim of an Alice Holt vessel, a Class 3B cooking-pot copying contemporary BB1 and BB2 forms (Fig 22, 10). The type with slip decoration is dated 270–420 AD (Lyne and Jefferies 1979, Fig 28). Another Class 3B rim was also a fieldwalking find from the Bancroft villa.

The question arises as to why a fairly undistinctive greyware travelled so far from its source at all? Lyne and Jefferies (1979, 57) came to the conclusion that some of the Alice Holt vessels were containers, perhaps of a honey-derived beverage of the mead variety or perhaps even honey itself. They suggest that the value of the contents covered the production and enormous transport costs, not only of the containers but of the cooking pots etc. placed on the same cart or in the same boat. This explains why the vessels could be fairly plain, whilst items from the Nene Valley and Oxfordshire kilns which were sold purely as pottery products needed to be made as attractive as possible.

It has been noted (op.cit 58) that the percentage of Alice Holt material at Verulamium, only approx. 43kms from Milton Keynes, is quite high considering its distance from the source (the theatre fill contains up to 10%), yet beyond Verulamium only minute quantities of Alice Holt pottery found their way up the Watling Street. This latter fact is reflected in the percentages for this area.

Fig 48, 9

9. Fabric 31a MK211/76, fourth Cent. Vessel type 4.42, dated AD 270–350.

D: THE MORTARIA Fig. 49

(This section is based upon reports by K. Hartley)

Fabrics 4a, 4ag, 4b, 4ba, 4c, 4d, 4e and variants, 4f, 4g, 4h, 4j, 4k, 4l, 4m, 4n,

There is nothing surprising in the sources of the Milton Keynes mortaria nor their proportions (See Table 6), except in the presence of two possibly imported mortaria at Bancroft, some from the Northamptonshire area dated 240–400 AD, when there is little evidence to support mortarium manufacture there after c. 250 AD and a single body sherd possibly from Swanpool in Lincolnshire. The latter closely resembles Swanpool products but would need analysis before such an origin could be confirmed.

	Caldecotte	Bancroft	Stantonbury Corner	Wood	Wymbush
	1st-late 2nd	1st-late 4th/early 5th	Early 2nd-late 4th/ early 5th	Mid 2nd-mid 4th	Late 2nd-late 3rd+
Oxford - white	65.38	39.13	31.58	50	50
Oxford red - red slip	0	17.39	18.42	28.12	10
Oxford red - white slip	0	26.08	23.68	0	10
Oxford red - slip eroded	0	0	0	6.25	0
Oxford - total	65.38	82.6	81.57	84.37	70
Verulamium	7.69	1.44	5.26	3.12	0
Mancetter/ Hartshill	7.69	1.44	5.26	9.37	10
Lower Nene Valley	0	4.34	2.63	0	0
Hadham	0	1.44	0	0	0
Northants/ Beds/Bucks	19.23	4.34	5.26	3.12	10
Swanpool?	0	0	0	0	10
Imports	0	2.89	0	0	0
Unknown	0	1.44	0	0	0
Total number of vessels	26	69	38	32	10

Table 6. Percentages and origin of mortaria from the larger excavated sites

The Table above shows the clear dominance of the Oxford mortarium industry in this area throughout the whole of the Roman period. The range of forms, (classification by Young, 1977), is as expected but includes two variants both based on the M18 and a stamped mortarium, No 11, either of Oxford or local manufacture with a form unrelated to the Oxford series.

The earliest stratified Oxford whiteware 4a mortarium sherd came from the late first/early second century ditch MK345 (Group 3) near Bancroft villa, where it composed 0.12% of the 831 sherds. It was accompanied by a mortarium of Beds/Bucks/Northants origin (Fig 8, 39) which equalled 1.2% of the group.

Ditches F9 and F41/F119 at Caldecotte produced the rims of two M1 mortaria, dated c. 100–140 AD, whilst at Stantonbury another early form, an M2, dated 100–140 AD came from a largely early second-century pit (MK301 86). Group 4 at Loughton did not produce a single mortarium sherd. Group 5, dating from the first to the third quarter of the second century contained only one Oxford whiteware sherd, 0.25% of 384 sherds,

whilst the mid to late second-century Group 6, the Woughton pit assemblage, produced 1.77% in Oxford whiteware and 0.12% in Northants/ Beds/Bucks mortaria. One of the Oxford pieces was a rim from an M14, dated 180–240 AD (at Holne Chase another M14 rim also came from a predominantly mid-late second century feature) whilst another rim, probably an Oxford product but badly burnt, may have been an M2 or M3, dated 140–200 AD.

The pottery from the occupation layer at MK313, Group 7, dated late second century, included the rim of an M18, a type dated 240–300 AD. As the group was not securely sealed it is possible that some contamination took place. The following assemblage, Group 8, very late second century in date, produced the rim of an M10 or M11, 180–240 AD in date.

Surprisingly, after this period, Groups 11 to 14, covering the mid third to mid fourth century period included no white Oxford mortaria. This is however atypical of the area for on all of the larger sites typical third-century Oxford mortaria (M17's and M18's for example) have been found. In the later groups 15 and 16 white Oxford mortaria are found as M22s and possibly an M23 (240–400+ AD and 350–400+ respectively).

The earliest stratified orange Oxford mortarium occurred in the early to mid fourth-century Group 13 and after this the ware is also found in every group up to and including Group 16. The form of the orange Oxford mortarium (not illustrated) in Group 14 has been difficult to determine; it most closely resembles a WC4.1 but the date of this type (240–300 AD), does not correspond with the group dating, which is mid fourth century. This same group also contained the rim of a Northamptonshire mortarium (Fig 21, 15) dated 240–400+ AD. The form of this vessel and its presence in a securely stratified assemblage clearly point to some mortaria production in that county after the industry was thought to have stopped.

Group 15 contained only a single orange Oxford mortarium sherd, whilst Group 16 produced the rim (Fig 22, 15) of a C.100, dated 300–400+ AD. Group 17, the very latest assemblage tentatively dated late fourth-early fifth century produced neither white nor orange Oxford mortaria but instead contained the rim of an orange Much Hadham mortarium (Fig 23, 33), the form of which closely resembles an Oxford C.100 and may be of a similar date, and the rim of a Lower Nene Valley mortarium (Fig 23, 34).

Unfortunately material from the other mortaria producers is not well represented in the seventeen groups, although found elsewhere within the city. For example, although the mortaria from the local kilns, either from Bucks, Beds or Northants, are second in dominance to the Oxford kilns (see Table 6) they occur only in Groups 3, 6 and 14. However, their percentage at Caldecotte, 19.23%, suggests that they were largely in use during the late first and second centuries.

Mortaria from the Verulamium region are the earliest type of mixing bowl found within Milton Keynes; one flange fragment from Caldecotte is dated to of 80–120 AD, by a stamp by Lallaius (Fig 49, 13). The latest, most closely dated Verulamium material is from Sherwood Drive, being a stamped piece (Fig 49, 16) by Mertucus dated 110–145 AD. Mortaria from the Verulamium region are not strongly represented anywhere within Milton Keynes; at Caldecotte they equalled only 7.69% of the mortaria total, its highest level to date. That Caldecotte should have produced the greatest quantity of this ware is a result both of the date of the site – roughly first to late second century – and its proximity to the Watling St, on a direct route through to the Verulamium region. It is therefore surprising that despite such access and the fact that the Verulamium kilns continued producing strongly up to the mid second century, Oxford mortaria appear to have dominated the market once the Oxford kilns were in production, c. 100 AD (Young 1977, 61).

The Mancetter-Hartshill kilns, also close to the Watling St, also supplied this area with a small quantity of mixing bowls. At Caldecotte, Bancroft and Stantonbury the percentages for the Mancetter-Hartshill mortaria are identical to those for the Verulamium region, although at the predominantly later sites of Wood Corner and Wymbush, where Verulamium region mortaria would not be expected, the Mancetter-Hartshill percentages are greater (See Table 6).

The earliest Mancetter-Hartshill mortarium sherd came from Wood Corner (site approx. mid second to mid fourth century in date), dated 140–190 AD. However, a more firmly dated piece, a stamp of Iunius, No. 15, dated 155–185 AD, was a topsoil find at Caldecotte. A third century sherd, dated 200–250 AD, was recovered at Stantonbury, whilst both Wood Corner and Wymbush produced third to fourth century pieces. A sherd from Bancroft appears to be fourth century.

Despite the marketing that took place between this area and the Lower Nene Valley, largely in the colour-coated trade, the number of mortaria from that region is small; Bancroft has the largest percentage with 4.34% of 69 vessels. Lower Nene Valley mortaria are not represented at all at Caldecotte, Wood Corner or Wymbush.

The earliest Lower Nene Valley mortarium is

from Bancroft and has been dated by Kay Hartley to "later than 230 AD". Bancroft also produced another vessel dated "later than 250 AD" and two others of fourth century date. Both are of of unusual form; one came from the tentatively dated late fourth to early fifth century Group 17 (Fig. 23,34) and the other No. 7 from a rubble context. The Lower Nene Valley mortaria at Stantonbury are late third to fourth century in date.

A small quantity of mortarium sherds from the Hadham kilns in Hertfordshire and *possibly* a single sherd from Swanpool in Lincolnshire have also been discovered in this area. One of the Hadham rims (Fig 23, 33) was found with the fourth century Lower Nene Valley rim, mentioned above, in Group 17, whilst the 'Swanpool' body sherd was retrieved from a layer overlying Ditch 57–58, Group 13, dated early to mid fourth century.

The Milton Keynes mortaria also include two possible imports. The rim profile of one (Fig 49, 1) is unusual in Britain and the only close parallels in form and fabric known to Kay Hartley are unpublished pieces from Richborough. This rim is likely to be earlier than 250 AD. The other possible import could also be a Northamptonshire product and its date is indeterminate.

Mortarium Fabrics by K Hartley

Fabric 4a
Slightly sandy, off-white fabric, occasionally with a pink core or pink throughout and sometimes with a cream to buff slip: there is very little very fine quartz and red-brown temper. The distinctive trituration consists entirely of mixed pink, brownish and transparent quartz. It was produced at workshops such as those at Cowley, Headington, Sandford etc. in the vicinity of Oxford.

Fabric 4ba
Fine textured, slightly micaceous red-brown fabric, sometimes with a grey core; thin white slip. Trituration as Fabric 4a. Produced at workshops at Baldon, Cowley, Dorchester and elsewhere in the vicinity of Oxford.

Fabric 4b
Fabric and trituration as Fabric 4ba but with a red-brown samian-like slip. Produced in the same workshops as Fabric 4ba.

Fabric 4c
Usually a distinctively fine-textured, creamy white fabric, often fired to a very hard texture in the third and fourth centuries; it is sometimes described as pipe clay but it often has a little fine quartz and occasional red-brown temper. The mortaria are normally self-coloured but the surface is sometimes fired to a pale buff. Trituration grit before c. 135 AD usually contained a lot of quartz, and may sometimes be entirely quartz but after c. 135/140 AD it consists of abundant blackish to dark brown and/or red-brown grog. Produced at workshops adjacent to Manduessedum, at Hartshill and probably in the intervening and surrounding area on the borders of Warwickshire and Leicestershire.

Fabric 4f
A hard, off-white fabric with little very fine temper: a brownish or yellowish slip was often used. Trituration consists of black ironstone grit. There were numerous workshops in the Castor-Stibbington area of the Lower Nene Valley.

Fabric 4ag
This is probably basically the same as Fabric 4a but it is so heavily tempered with quartz inclusions that it closely resembles Fabric 4g. The trituration is, however, the normal one used in the Oxford potteries. When the trituration is lacking it can be near impossible to distinguish from Fabric 4g. Produced in the first half of the second century in the vicinity of Oxford.

Fabric 4g
Granular, usually greyish-cream fabric sometimes with a pink or blackish core and often with a cream to buff-brown slip; the fabric can be orange-brown. The texture is obtained by the addition of a vast amount of well-sorted, tiny quartz grit, possibly some flint and a little red-brown material. The trituration consists of flint, quartz and sometimes very sparse red-brown material; it is this which distinguishes it from Fabric 4ag.

Produced in workshops at Bricket Wood, Brockley Hill, Radlett and Verulamium in Middlesex and Hertfordshire and described as 'Verulamium region' unless the specific kiln-site is known. Although this is the type of fabric commonly associated with these potteries they did produce a finer grained fabric which differs only in having fewer and smaller inclusions and being slightly smoother to the touch.

Fabric 4eg
Sandy, buff-brown fabric with grey core; packed with mostly quartz inclusions which are not perhaps quite as well sorted as in Fabric 4g but the fabric and trituration grit are closely similar; trituration consists of flint and quartz, traces of a paler slip survive. Probably made in the Northants/ Beds/Bucks area.

Fabric 4ea
A fabric with some similarity to both fabrics 4a and 4eg, slightly sandy, with tiny quartz and more vari-sized red-brown inclusions and occasional large soft, white inclusions; it can have a pink core. Too little trituration survives for description but it

probably included quartz and red-brown material. Minor workshop in Northamptonshire.

Fabric 4ec
Hard, fine-textured white or cream fabric with a little quartz, some soft grey temper and some ill-sorted red-brown inclusions; burning out of some of the soft grey temper could perhaps account for holes in the fabric. Black and blackish iron-slag trituration, one sherd has a single quartz trituration grit surviving. Probably made in Northamptonshire or just possibly in the Mancetter-Hartshill potteries.

Fabric 4em
Hard, self-coloured, fine-textured, pale brown fabric with some tiny red-brown and quartz inclusions; trituration mostly or solely quartz: surface self-coloured and burnished. Probably produced in a small local workshop.

Fabric 4eba
Fine-textured, red-brown fabric with cream slip; some quartz inclusions: no trituration survives. Probably produced by a local workshop.

Fabric 4ed
Red-brown fabric with a good amount of mostly quartz inclusions, probably flint and quartz trituration. Probably made locally.

Fabric 4ej
A slightly abrasive, drab greyish-cream fabric with very fine white and transparent quartz temper; white quartz and blackish iron slag trituration. Probably produced at some small workshop in Northamptonshire.

Fabric 4ek
Hard, but very fine-textured fabric fired to pale buff with orange-brown core: trituration mostly flint with some iron slag and a little calcareous material. This fabric can be attributed with reasonable certainty to a small workshop in Northamptonshire.

Fabric 4h
Hard, dark orange-brown fabric with very fine quartz temper; the trituration consists of transparent and white quartz and a little red-brown material. Fabric self-coloured. Possibly produced at Much Hadham, Herts.

Fabric 4d
A hard, slightly granular, orange-brown fabric often with a grey core, tempered with a fair amount of very finely fragmented quartz and red-brown grit, and with a white slip; ironstone trituration grit. Probably Swanpool, Lincs.

Fabric 4m
A self-coloured, fine-textured, pale orange-brown fabric with very little fine temper, mostly quartz with very occasional red- brown fragment; white quartz trituration. This precise combination of fabric, trituration and rim-profile is closely matched at Richborough (unpublished) and may well indicate an import rather than production in Northamptonshire.

Fabric 4n
Self-coloured fabric, similar in colour to fabric 4m but much finer in texture, with little or no temper; transparent quartz trituration. Only body sherds survive in this fabric. There is some similarity between fabric 4m and 4n and the mortaria in both fabrics are highly polished or smoothed; a similar origin for both is possible.

Fig 49, 1–16
Only those of special interest have been illustrated.

1. Fabric 4m K105 (85) and (177), rubble. Probably an import.

2. Fabric 4eba MK44 F71 (1). Probably from a local workshop, date c. 180–240.

3. Fabric 4ag MK301/1, topsoil. Oxford, 100–140 AD.

4. Fabric 4ea MK105 (1) topsoil. Northamptonshire, 240–400 AD.

5. Fabric 4eg MK44 F77 (1). Probably from a local workshop, c. 240–400.

6. Fabric 4a MK105 (437) rubble. Oxford. A reeded M.14, 180–240 AD.

7. Fabric 4f MK105 (30), rubble. Lower Nene Valley. Fourth Cent.

8. Fabric 4h MK105 (563), tepidarium of southern bathsuite, Rm 15. Hadham, c. 240–400+

9. Fabric 4b MK301/1, topsoil. Oxford C.100 300–400 AD.

10. Fabric 4b MK301/6, rubble. Oxford. C.97. 240–400+ AD.

Nos 11–16 are stamped vessels and the following report on them and Nos 17–19 (not illustrated) is by Kay Hartley.

The sherd numbers refer to the Level III catalogue of the pottery from each site, which is preserved within the Unit's Archive.

11. Two stamped mortarium fragments in Fabric 4a. The fabric of one of the pieces is much pinker than the other but the similarity in rim-form together with the fact that no other example of the stamp has been recorded points to them being from the opposite sides of one vessel. The fabric would fit very well with manufacture in the Oxford potteries (i.e. Cowley, Headington etc.). The stamps show a potter's name though this was rare in the Oxford

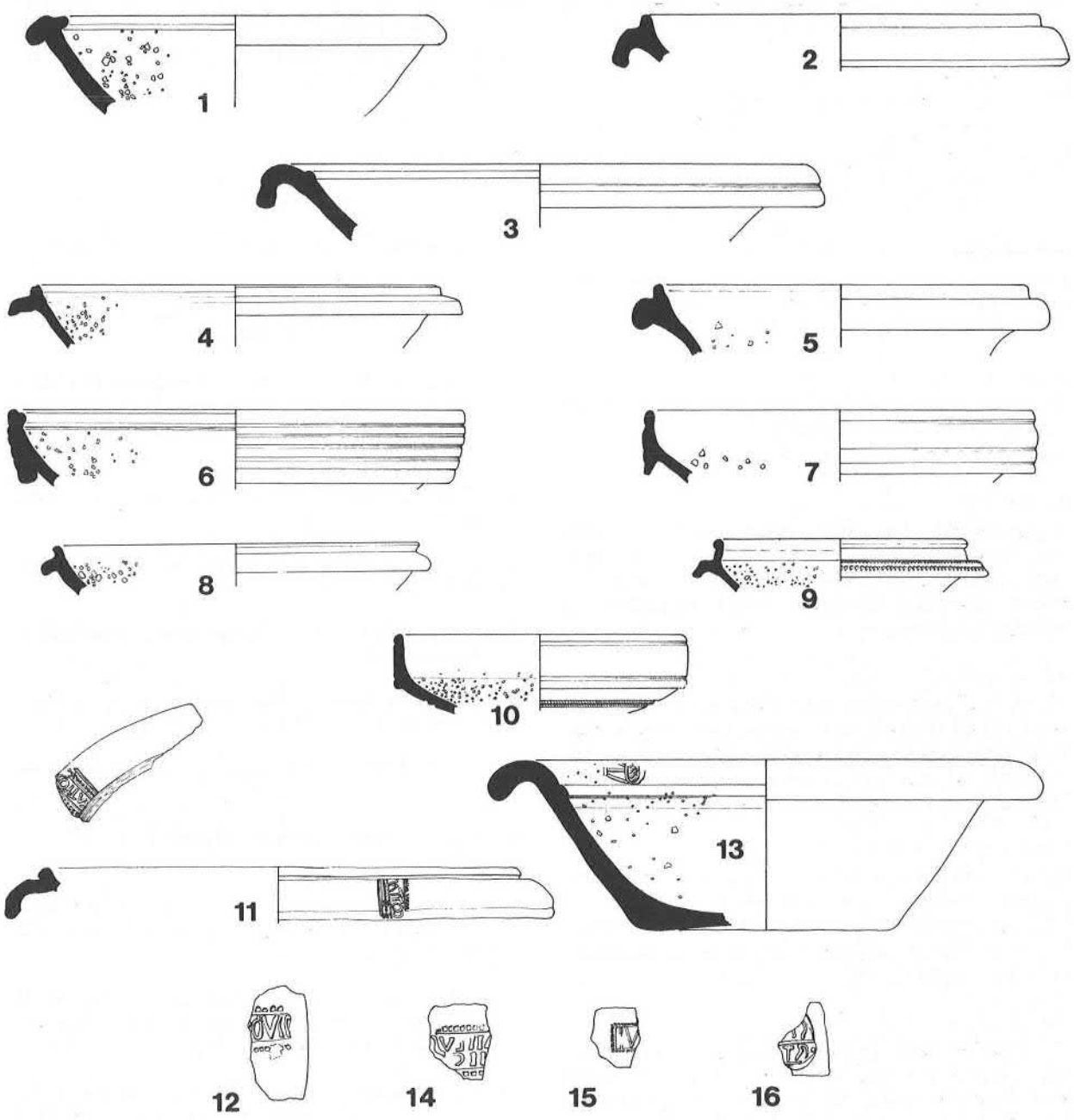

Figure 49: Mortaria (Scale 1:4).

workshops where pattern or nonsense stamps were far more commonly used.

The stamp is unusual in having borders of differing types and the letters were very shallowly drawn in the die. Various interpretations of the stamp are possible, for example COTTAS retrograde, Pattos or SATTOS with initial S reverse; the stamp is not necessarily complete. It is undoubtedly a second-century mortarium made within the period AD 130–170. Only further examples of this potter's work will permit identification of his name and make it clear whether he worked in the Oxford potteries or at a minor local workshop working in the Oxford tradition. MK301, Stantonbury, sherd nos 126 and 127.

12. Nos 52 and 129 are joining sherds whilst Nos 91 and 125 are also from the same vessel which is in Fabric 4g made in the extensive potteries in the Verulamium region. Fragments numbered 125 and 129 have incomplete potter's stamps, giving OVI , which can be attributed to Ovidus or Ovidius (Frere 1972, Fig 146, 43, and probably 49). Four other mortaria are known with the same stamp, all from Verulamium. His rim-forms and the date of the relevant deposits at Verulamium support a date within the period 100–140 AD. MK301, Stantonbury, sherd nos 52, 91, 125 and 129.

13. A heavily worn mortarium in Fabric 4g with a fragmentary stamp which is almost certainly from a die of Lallaius (Frere 1972, 376, No 24 and Frere 1984, 280, No 24). Forty-seven stamps of his have been recorded from the kiln site at Brockley Hill, Middlesex, where he undoubtedly had a workshop (Castle 1972, 85, M50–M57; Castle 1976, 216–218, Fig 8, MS32–64). Forty-four mortaria of his have been recorded from occupation sites in England and Wales: Aldborough, Yorks: Brixworth, Northants: Cambridge; Castor: Ewell, Surrey: Great Weldon: Heronbridge: Kirkham, near Preston; London (c. 18): Nazeingbury, Essex; North Church, Herts; Otford, Kent (c.3): Richborough; Segontium?; Silchester; Staines; Verulamium (4); Wall: Walton-le-Dale (2); Worcester and Wroxeter. One stamp from Verulamium is recorded from a deposit dated 90–105 AD and his rim profiles would best fit a date in the period 80–120 AD. MK44, Caldecotte sherd No 144.

14. Two joining sherds, one of them burnt, from a mortarium in Fabric 4g. The broken, retrograde stamp is from one of the dies of Melus I, which gives MIILVS/FIICI retrograde, when complete: two verticals were not uncommonly used for E, the lower bar of the F is missing and the die concerned is unusual in reading Feci rather than Fecit. Twenty-nine stamps of his have been recorded from the kiln-site at Brockley Hill, Mddx, where he worked (Suggett 1954). Thirty-six of his mortaria have now been noted from the following occupation sites in England: Box, Wilts; Caldecotte, Milton Keynes; Canterbury; Chichester; Eccles, Kent; Enfield, Mddx; Farningham, Kent; Lincoln; Little Hallingbury, Essex; London (16); North Church, Herts; Richborough; Springhead, Kent; Thanet; Verulamium (3); Wanborough, Wilts; Water Newton (2); and Withington, Glos. The range of rim-profiles produced by Melus places his work within the period 90–140 AD. MK44 Caldecotte, sherd No 181.

15. A small rim-fragment from a mortarium in Fabric 4c; the broken stamp reads IV, and is from die 10 of Iunius. It is one of perhaps 18 used by this potter in his workshops at Mancetter and Hartshill, where kilns of his have been found. 98 of his mortaria have now been recorded from other sites throughout England and one from Castlecary in Scotland. His work occurs in those Pennine forts believed to have been unoccupied c. 120–160 AD. Since he was one of the most prolific of the stamping potters, this fact combined with his virtual absence from Scotland suggests that his main activity post-dates the occupation of Scotland. He was also one of a small number of Warwickshire potters, stamping mortaria, who introduced new, nearly hammerhead, rim-profiles which became the norm in the third century. The evidence points to a date c. 155–185 AD. MK44, Caldecotte, sherd No 182.

16. A rim fragment in Fabric 4g with a fragmentary two-line stamp. Collation of stamps from the same die permit a reading MII/RTVC retrograde: Mertucus seems to be the name intended, two verticals being quite comonly used for E. His work can be attributed to Brockley Hill (2–3 vessels) and Radlett (4–5 vessels) where his work has been found on the kilnsites (Castle 1976, 216, Fig 8, Ms92–93 with the best published drawing of his restored stamp and p.219; Castle 1974–76, 152, M13–16). Other mortaria of his have been noted from Fenny Stratford, Bucks; London (5); Maryport; Melandra Castle (1–2); Milton Keynes; Otford, Kent; Staines (2); and Wilderspool. The rim-profiles used indicate that he was at work within the period 110–150 AD. MK100, Sherwood Drive, sherd No 183.

17. Not illustrated. A stamp in Fabric 4g, Saturniunus I Brockley Hill, Middx. 105–140 AD. See Frere 1972, 377, Fig 146, No 36 for drawing and Frere 1984, 287, No 96 for information. MK297 Woughton.

18. Not illustrated. In sandy, cream Fabric 4g with buff slip, tempered with fine red-brown grit; the trituration grit has been worn away by use. There is an almost complete impression of a stamp which probably reads ARIINI-X, or ARIINF.X, retrograde. The name is uncertain but perhaps ARENVS is intended, the X being a space-filler, (Holder Altceltischer-Sprachschatz). He belongs to a series of potters producing semi-literate stamps in the first half of the second century in the Verulamium region. MK45, Holne Chase.

    Other stamps of his have been noted from Brockley Hill; Great Chesterford; London (5); Richborough; and Verulamium (11). The rims point to a date within the period 110–145 AD, and the limited markets indicated by the distribution is typical of these mortaria with semi-literate or illiterate stamps of this period and origin.

19. Not illustrated. A mortarium in sandy cream fabric, 4g with pink core, which has been burnt grey on the

inside, and the upper side of the flange. The stamp is too fragmentary for identification but the vessel is certainly from a kiln in the Verulamium region, and can be dated c. 80–120 AD. MK45, Holne Chase.

E: Lead Glazed Wares (Fig. 9, 23 and 24)

Fabrics 13a, 13b and 13c

Imported lead-glazed wares circulated with the army from c.43 to 70 AD; later, particularly in the late first to early second century, they were manufactured in Britain, perhaps under the aegis of the army (Swan 1978, 10).

Remnants of three lead-glazed vessels have been found in Milton Keynes. Each is different in origin; one is continental, another British, whilst the third comes from an unknown but obviously separate source.

The most complete of these vessels, an imitation Dr.30, was found as thirty-one shattered fragments at the Bancroft villa. It is an English product from the South-Eastern group of potteries (Fabric 13a) and has been published previously (Arthur 1978, Fig 8.2, No 5.2). This pottery was the most widely distributed of all the Romano-British glazed pottery groups, normally with a riverine distribution along the lower Thames Valley, eastwards of Staines. It had also been found in Hertfordshire, Surrey, southern Essex and northern Kent. The Bancroft vessel appears to be an outlier which, combined with other outliers, suggests a further distribution along the Watling street.

As the vessel was unstratified, dating comes from stratified sherds found elsewhere. These support a date of around the 80's for the south-eastern group's appearance. The dating of the industry's duration and termination is less positive; Arthur (1978, 301) suggests on present evidence a terminal date in the Hadrianic period (c.117–138 AD), perhaps early on, as the limited amount of pottery produced would suggest a short time-span for the group.

The second vessel, in Fabric 13b, came from Group 4 (Fig 9, 23), dated late first to mid second century, and consists of only two fairly worn sherds. These have been seen by Paul Arthur and the fabric is not distinctive enough for him to assign it by eye to any known group. The form is difficult to determine but is possibly a Dr.37 or Dr.30 copy. The vessel has barbotine or possibly relief-moulded decoration of overlapping half-circles covered by a white colour-coat and then glazed. By its description a vessel similar in both fabric and decoration was found at Wall, Staffordshire; if related the two may again indicate a Watling St distribution (Gould 1966, Fig 9, 27). All that remains of the third vessel (Fig 9, 24) is a single small sherd, possibly part of a large beaker (cf. K. Greene 1979a, 96, Fig 42, 16), imported from the Allier Valley region in France. It is more commonly known as St Rémy ware (Fabric 13c). This is the type of lead-glazed material that circulated with the army between 43–70 AD. Like the previous vessel this too came from Group 4 in the Loughton Valley, dated late first/mid second century AD.

It is interesting to speculate on why lead-glazed pottery is not more in evidence and why the industry collapsed. Arthur (1978, 295–297) states that its popularity during the last millenium makes it hard to understand why it was not more successful during the Roman supremacy; he discusses a number of possibilities that may have wrought its collapse and suggests that perhaps the major reason was simply that the small pottery 'cottage industries' making such finewares dried up in the face of the mass productivity of the Lezoux samian industry.

F: MICA DUSTED WARES Fig 50

Fabrics 34a, 34b, 34c and 34d

Mica-dusted wares are vessels that were given a wash containing innumerable specks of yellow mica in an attempt to give the pots a gold or bronze metallic finish. The technique may have originated in Gaul and the Rhineland. By the mid first century such vessels were imported into Britain and soon imitated here; a kiln at Gloucester dates to the 70's. The fashion scarcely outlasted the early second century (Swan 1978, 11).

Mica-dusted vessels are found but rarely within our area. To date they occur in four distinct fabrics; of these Fabric 34a is the earliest. It was first found in many fragments in the mid to late first-century pit group, Group 2, at Cotton Valley MK71(Fig 7, 42). The form is that of a jar with pressed-out 'bosses', a form typical of the mid first century (Swan 1978, Pl. 2). At Verulamium a similar vessel was dated 60–75 AD (Frere 1972, Fig 103, 128).

The late first to mid second-century assemblage from MK307, Group 4, produced a rim and two body sherds, again in Fabric 34a. It is probable that these were also part of a 'bossed' jar, Fig. 9, 25.

Both Groups 5 and 6 (Fig 10, 21 and Fig 13, 79 respectively) contained the remains of mica-dusted indented beakers in Fabric 34c; the vessel in Group 6 was too fragmentary to reconstruct well but the rim is illustrated. A mica-dusted indented beaker at Verulamium (Frere 1972, Fig 123, 836) was dated 150–160 AD.

Group 6 also produced a vessel in the thicker mica-dusted ware 34b. The form is that a platter or

bowl with a flanged upward pointing rim, (Fig 11, 20). Another vessel in the same fabric but of different form, No 21, was recovered from a largely second-century ditch at Stantonbury (MK301/84).

The remaining vessel is a bowl in Fabric 34d, No 22. It was found during the rescue excavations of Kiln II at Caldecotte and came from an adjacent but obviously related ditch. The kiln has been dated early to mid second century.

As might be expected the Milton Keynes mica-dusted vessels came only from first and second-century deposits. The earliest may be continental, although in the Quinton report Dr. Kevin Greene noted that a similar beaker with raised bosses need not have been imported (Friendship-Taylor 1979, 91). As yet it is unfortunately not possible to locate a definite source or sources for these distinctive wares.

Fig 50, 21–22

21. Fabric 34b MK301/84 late first Cent. to third quarter second Cent.

22. Fabric 34d MK357 (8) early to mid second Cent.

G: UNUSUAL BLACK COLOUR-COATED FINE WARES

i Colchester Colour-Coated Ware (not illustrated)

Fabric 23a
Vessels from the Colchester kilns appear to have reached here in such small quantities that to date only one body sherd has been positively identified. This, unfortunately, came from a topsoil level at Stantonbury (MK301 F112) in 1975. The sherd is very typical of the Colchester fabric but there is *slight* doubt over its origins in that visually at x25 magnification the fabric is identical to Andersons North Gaulish Fabric 1 (Anderson 1980, 28) and possibly with other continental and (unknown) British sources (Toller pers. comm.). However, as Andersons North Gaul Fabric 1 appears to be largely confined to the west of the country, occurring in large quantities in Wales and the West Country (Anderson 1980, 31) and Mr Toller gave the sherd a 98% probability of being from Colchester it appears reasonable to classify the piece as a Colchester product.

ii Lower Rhineland? Fabric 1

Fabric 23b
This occurs but rarely in Milton Keynes. Anne Anderson has identified the very fine rim which came from Group 6, dated mid to late second century AD, as a Lower Rhineland Fabric 1 product (Fig 13, 69). However, recent research has cast some doubt upon this as the source. The ware does not appear to have been exported to Britain after 165/170 AD, no doubt due to the increased output of the potters working at Colchester and the Nene Valley (Anderson 1980, 20).

The distribution pattern of this fabric indicates a concentration in the east, perhaps owing to a trade system based on ports such as London, Richborough and Newcastle. Pottery arriving in London may have been traded up the Watling Street to Magiovinium or Lactodorum and thus to Woughton.

iii Central Gaulish Metallic Black Slipped Ware

Fabric 23c
The remains of only one vessel in this ware have been found within the Milton Keynes area. Fortunately it came from a sealed deposit; Group 6, dated mid to late second century AD.

The vessel (Fig 13, 68), is a vase with a high foot and a single or double handle, (evidence of only one being found) decorated with bands of rouletting and a moulded applique shell. Dr Kevin Greene, who examined this material, believes that the shell originally flanked a larger motif, such as a mask c.f. Simpson, 1957, pl. XIV, 29.

As stated by Dr Grace Simpson (1973, 42) these vessels are rare in Britain. The total number that she had been able to locate amounted to only forty-eight plaques from thirty-six (or thirty-eight) vases, and twenty-eight moulded beakers, from forty-one different places. This makes the Milton Keynes find of added interest.

See also 'rhenisg' ware page 145 and black-coated samian page 156.

H: WARES OF UNKNOWN ORIGIN

i Lead-Glazed Ware, see page 136

ii White/pink Ware, see page 112

iii 'London Ware copies Fig. 50

Fabric 15
This is a rarely-found finely micaceous fabric with black or dark grey surfaces and lighter grey or brownish cores. To date ten sherds have been retrieved from the mid to late second-century pit, Group 6, at Woughton MK297, with another from the topsoil over the site (a fieldwalking find in 1973), two from F108 at Caldecotte, from a ditch of mixed dating but predominantly late first to late second century, and two from the topsoil at Stantonbury MK301.

The ten sherds from Group 6 comprise 1.18% of 847 sherds. They are from two vessels, one a deep

bowl copying a samian Dr.37, decorated in the 'Londonware' fashion with compass-scribed semicircles and dots, the other a rim fragment from what may have been a copy of a Dr.36 (see Fig 11, 24 and Fig. 12, 35 and 37). The Caldecotte pieces are also from a copy of a Dr.37 (Fig 50, 19), whilst the Stantonbury sherds are fairly heavy and appear to have been part of a base (not illustrated).

Similar vessels are found in second-century deposits in southern England; Verulamium, for example, produced a vessel very like the Woughton bowl, also in a finely micaceous smooth dark grey burnished ware (Frere 1972, Fig 119, 694). On the Woughton vessel the burnishing, which is linear in effect, is discernable only on the inside face.

It has been established that these Milton Keynes vessels are not in the same fabric as those found in London (Paul Tyers, pers.comm), nor are they like those produced in the Nene Valley (Rob Perrin, pers.comm.). As yet their place of origin remains unknown.

Fig 50, 19

19. Fabric 15 MK44 F108 B (1) mixed dating, predominantly late first to late second Cent.

Soft greyware Fig 50

Fabric 25/30
Two thin-section groups were found to apply to Fabric 25/30. these being groups 1 and 3, given on page 85.

Initially Fabrics 25 and 30 were two separate fabrics, the latter being slightly sandier than the former. However, it proved difficult and time-consuming to determine, either by eye or binocular microscope, which of the two groups various sherds belonged to and for this reason they were amalgamated.

The dominant forms in this soft grey fabric are beakers and wide shallow bowls. The earliest vessels were found in ditches (not the Pit Group 2) at Cotton Valley MK71 and are also thought to be mid to late first century in date. The first of these vessels is a copy of a Gallo-Belgic butt-beaker (Cam.119c). The vessel, No 1, is decorated with light rouletting on two wide bands demarcated by grooves, and is of a type dated 43/44 to c. 65 + AD at Camulodunum (Hawkes and Hull 1974, LVIII). The fabric is imitation Terra Nigra.

The second vessel, No 4, is a large globular beaker; both its decoration and rilled everted rim are unusual. The decoration consists of a flattish cordon, demarcated by grooves and covered with lightly incised vertical grooves, below which is an area of barbotine dots and lines. Such decoration combines the barbotine dots of the Middle Rhine beaker Type 1 with the barbotine lines of the Middle Rhine beaker Type 2, both thought to be prototypes of the poppy-headed beaker (Tyers 1978, 87). The vessel also has similarities with the Gallo-Belgic globular beaker Cam. 91. The fabric is sandier than that of the butt beaker and may be copying German equivalents of Terra Nigra. However, it has a warped not quite circular rim which suggests that it may have been a 'second' and almost certainly is not an import. It may also be of interest that the site at Cotton Valley produced the not inconsiderable remains of a fine bossed mica-dusted beaker of a type which may also have connections with the Rhineland or Gaul.

Seven undiagnostic body sherds in Fabric 25/30 were found in Group 5 (early to the third quarter of the second century) at Caldecotte, where they comprised 1.82% of 384 sherds. Caldecotte produced a quantity of this ware from its many first and second-century features; one of these contained a large proportion of a Dr. 18/31 copy, No 8; the feature, ditch F10, was dated largely late first to early second century but had been cut by a late second-century pit. However, the form of the bowl with its low 'kick' suggests that it belonged to the earlier period. Other ditches produced further bowls and a small plain poppy-headed beaker, No 2. One odd rim is that of No 17 which may resemble the Dr.30 copy seen in the Oxford form R.64.8 (Young 1977, Fig 83, 225).

Holne Chase MK45 also produced some interesting vessels, one of these being a bowl, No 16, derived from a Dr.36/Curle 15. Its internal floor is decorated with a rouletted circle. Unfortunately a date cannot be given for the vessel as it was unstratified. The site also contained a narrow-necked jar with an everted rim, No 12 the base of a large vessel No 18 and a beaker base No 6 (all undated). A similar beaker base from the topsoil at Stantonbury had the remains of a black slip.

The mid to late second-century Group 6 surprisingly contained only 0.24% in Fabric 25/30, whilst the other Woughton group produced 1.075%. Group 7 did not produce a single sherd. The largely late second to early third-century ditches at Sherwood Drive MK100 contained a very fine beaker rim, No 3, and a sherd from a large vessel decorated with smokey burnished latticing, No 11. Group 9, also late second to early third century in date, produced body sherds, 1.58% of 120 sherds.

The late second to mid third-century Willen ditch, Group 10, contained one rim and two body sherds, 2.5% of 120 pieces. The rim (Fig 17, 24) is from a high-shouldered, probably fairly globular

beaker and this type of form suggests that it is residual within the assemblage, for many beakers of the latter part of the second century tend to be slimmer and weaker. This vessel is of a type common in the first century and first half of the second.

Neither of the later third-century assemblages, Groups 11 and 12, produced pieces of Fabric 25/30, although 1.68% of 297 sherds was recovered from the largely late third century topsoil at Wymbush. Groups 13 and 14, early to mid fourth and mid fourth century, both contained pieces, 3.01% and 2.73% respectively. Part of the former consisted of a narrow-necked jar, (Fig 20, 20), whilst the latter produced five pieces, including a rim, from a convex-sided dog-dish (Fig 21,1). This had been crudely incised with lines that appear to imitate the burnished arcs found on other dog-dishes of the period.

The small assemblage of 46 sherds from Bancroft, Group 15, did not contain any Fabric 25/30 pieces, whilst the late fourth to early fifth-century Group 17 produced 2.04% of 147 sherds, composed of a grooved dog-dish rim (Fig 23,2), perhaps in the tradition of the Class 6A dishes at Alice Holt. These, alongside the convex-sided dish (see Group 14, Fig 21, 1) appeared at Alice Holt during the late third century and by the later fourth these two types had completely replaced the simple 'dog-dish' (Lyne and Jefferies 1979, 48). Neither form is particularly common in this area.

The topsoil at Wood Corner, MK64, produced the everted rim of a wide-mouthed jar, No 13; the vessel is undated. Stantonbury too produced topsoil and destruction-rubble material; one of these is a small lid-seated jar No 5, whilst the other is a large part of a small handled jug, No 7. This vessel is badly eroded but traces of a black colour-coat are still visible.

Fabric 25/30 was produced for most of the Roman period, with imitation terra nigra vessels dominating the earliest phase followed by copies of samian bowl forms and poppy-headed beakers. The small lid-seated jar probably belongs to this phase. Narrow-necked and wide-mouthed jars may belong to both the early and late phase. The later range of vessel forms is not as determinable; certainly the convex-sided and groove-rimmed dog-dishes are late but the handled jug is undated. In form it resembles a small Oxford C.13 and may be of a similar date –? 350–400.001 (Young 1977, 151, Fig 54).

The great variety of form found in this fabric group combined with its production from the first to the fourth centuries AD suggests the existence of a number of workshops functioning at different times and working different but similar clays rather than the existence of a single pottery. These workshops need not necessarily have been close to one another, so the likelihood of finding a source or sources for this particular fine soft greyware appears remote.

The illustrations show the range of vessel types. The dates given refer to contexts, unless otherwise stated.

Fig 50, 1–18.

1. MK71 F34/30 mid to late first Cent.
2. MK44 F165 A (1) mid first to mid second Cent.
3. MK100 D2 mid/late second to late third/early fourth Cent.
4. MK71 F39/40, F30, F38 mid to late first Cent.
5. MK301 S1 F105 first to fourth Cent.
6. MK45 AA T9, predominantly mid to late second Cent.
7. MK301/6 destruction rubble, undated.
8. MK44 F10 (1) mixed dating, predominantly mid first to early second Cent.
9. MK44 F40 A (2) late first to mid second Cent.
10. MK44 F52 A (2) second Cent.
11. MK100 D2 as No 3 above.
12. MK45 A/C V3 undated.
13. MK64 unstratified.
14. MK44 F30 F (1) early to third-quarter second Cent.
15. MK109 unstratified.
16. MK45 unprovenanced.
17. MK44 F108 H (1) mixed dating, predominantly late first to late second Cent.
18. MK45 A/V V3 undated.

v Mica-dusted ware

See page 136.

vi Orange Buff Ware Fig 50

Fabric 38

This fabric is one of many predominantly second-century orange wares. Its range of forms is fairly narrow, consisting largely of imitation samian bowls and cups.

The earliest pieces of Fabric 38 were found in Group 4, dated late first to mid second century.

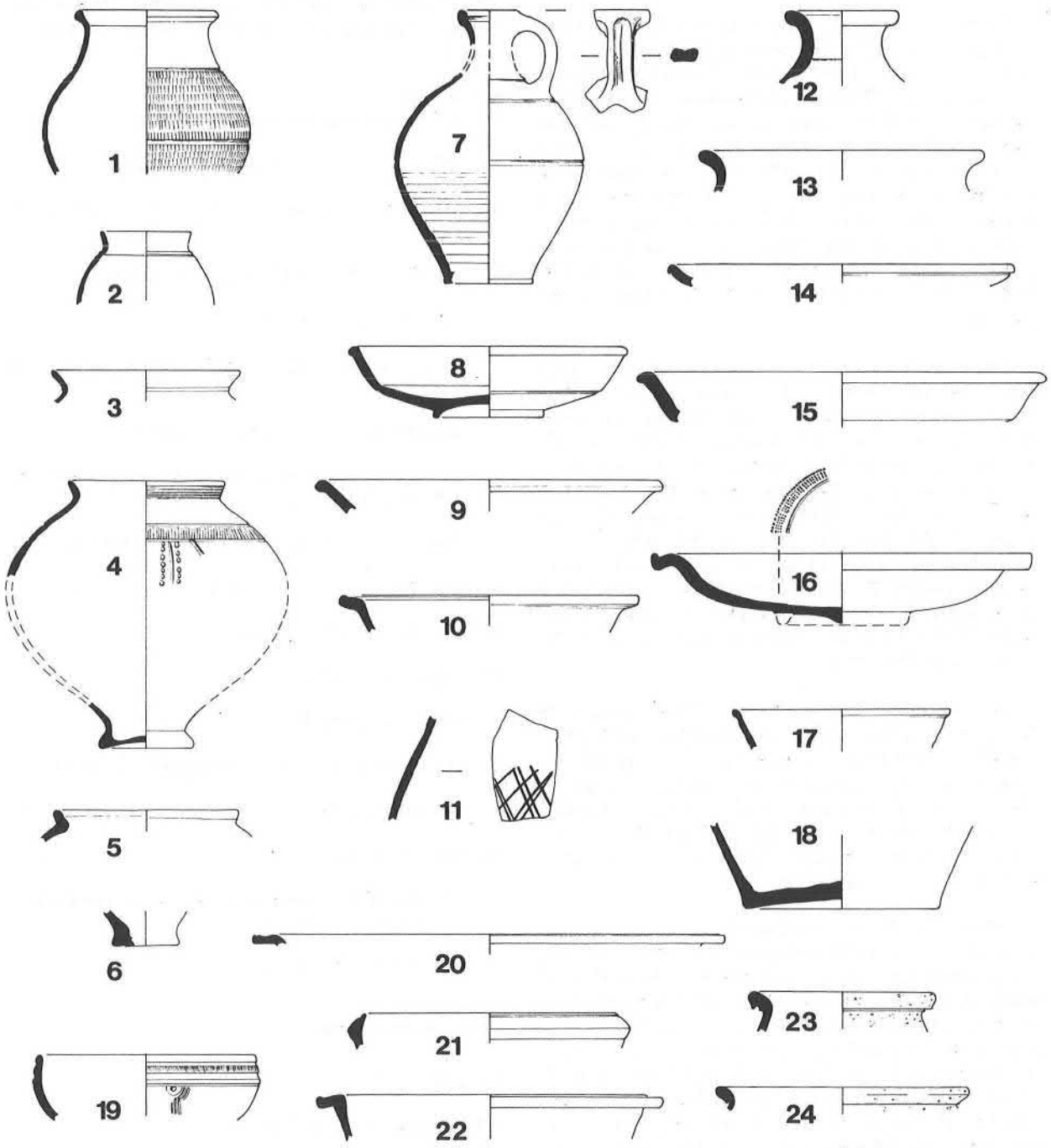

Figure 50: Soft Greyware, Fabric 25/30, nos. 1–18, 'London Ware' copies, Fabric 15, no. 19, Orange Buff Ware, Fabric 38, no. 20, Mica Dusted Wares, Fabric 34, nos. 21–22, Gritted White Ware, Fabric 39, nos. 23 and 24, (Scale 1:4).

The vessel, a bowl with slight bead rim and deep down-turned flange (Fig 9, 22) is similar in form to the Oxford oxidized types 0.39 and 0.40, dated 50–150 AD (Young 1977, 196). It composed 2.15% of 511 sherds.

The Group 5 assemblage, dated from early in the second century to its third quarter, produced a similar percentage, 2.08% out of 384 sherds. The vessel here may perhaps have been a copy of a Dr.37, being a hemispherical bowl with a bead rim (Fig 10, 9). The decoration consists of two thin parallel grooves.

Surprisingly Group 6 at Woughton, dated mid to late second-century had only 0.24% of 847 sherds in this ware, composed of two pieces; a hemispherical bowl with a double bead rim (Fig 12, 36) and a bowl/jar with out-turned moulded rim (Fig 12, 40). A single sherd of indeterminate form came from Group 7, whilst Group 8 produced a sherd from a large Dr.33 type cup and the cordoned or corrugated rim of a white slipped bowl (Fig 15, 29 and 8 respectively).

Group 9, the late second to early third-century assemblage from Wymbush did not contain any material in this fabric, whilst Group 10 produced a single body sherd. The mid to late third-century Group 11 contained three body sherds in Fabric 38, 1.55% of 194 sherds. As the ditch they were retrieved from did not contain any blatantly obvious residual material it would be unwise to judge these pieces to be such.

Other rims in this fabric include a piece from a bowl, possibly derived from a Dr.36/Curle 15, No 20, from feature 57 at Little Woolstone, MK109, which also contained Antonine samian, and a sherd from a possible copy of a Dr.27 (Fig 40, 65) from Caldecotte MK357, found within a layer relating to the early-mid second century kiln II.

Fabric 38 may equate with Fabric 8 at Towcester, which occurred in Phases I and 2 (late first century to the final quarter of the second) at the Grammar School site (Brown and Alexander 1982, 35). Fabric 8 took mainly imitation samian forms. Second-century orange samian copies do not appear to be obvious finds on other Northamptonshire sites ie. Brixworth (Woods 1970) and Mileoak (Green and Draper 1978). It may be that this gives an indication of its place of origin ie. it is not a Northamptonshire product but perhaps from somewhere along the Alchester road towards Oxford (and thus from Towcester down the Watling Street into the Milton Keynes area?). This might explain its similarity in fabric to the later Oxford material.

Fabric 38 is an important though minor fabric; important because if not recognised its similarity to worn orange colour-coated Oxford can be a cause for concern when it is found in second century contexts. Fortunately vessel form is usually sufficiently unlike the Oxford forms for this not to be a problem when rim sherds are recovered; body sherds however need to be looked at carefully. The fabric tends not to be as micaceous as genuine Oxford ware though this can be a rather subjective diagnosis, especially when the second-century pottery assemblage under review has possibly suffered from fourth-century disturbance and contamination.

Fig 50, 20

20. Fabric 38 MK109 F57 second Cent. context.

vii Gritted White Ware Fig 50

Fabric 39
This is a very unusual fabric with only two rims recovered to date. It is characterized by quartz sprinkled over the exterior surfaces. It was originally thought to relate perhaps to the Oxford gritted white-wares, but this is improbable owing to the extremely limited distribution of the Oxford material (Young 1977, 113).

Of the rims found, one appears to be part of a narrow-necked vessel whilst the other is too small for the diameter to be determined. Both rims are out-turned and moulded.

Dating of these pieces is difficult. One came from the topsoil at Wymbush MK211, which suggests that it could be late second to fourth century, but with a greater chance of being towards the end of that period. The other rim came from the fill of a 'depression' at Caldecotte MK44, accompanied by material ranging in date from first-century Belgic grogged (Fabric 46) to fourth-century orange Oxford (Fabric 24).

Fig 50, 23–24

23. Fabric 39 MK44 (139) first to fourth Cent. context.

24. Fabric 39 MK211/1 topsoil (diameter of vessel undeterminable)

viii Cream Orange Wares Fig 51

Fabrics 40a and 40b
This is a minor fabric which occurred between the second and fourth centuries AD. It was first recorded in Group 5 at Caldecotte, dating from the first to the third quarter of the second century, where it occurred as a copy of a Dr.38 bowl (Fig 10, 11), equalling 2.34% of the 384 sherds. In Group 6, mid to late second century in date, it composed 0.24% of the 847 pieces, in the form of a small jar or bowl with a samian coloured slip (Fig 13, 59).

It next occurred as a single body sherd in the Woughton feature, MK297 F24, Group 8, and as a Dr.18/31 copy in the Willen ditch assemblage Group 10. This is a rather bulky imitation (Fig. 17, 6) similar to the oxidised Oxford 0.41 and as the description of the orange/cream Oxford (Young 1977, 185) resembled this fabric the possibility of a relationship was considered. However, Dr. Young has seen samples of this group and does not believe them to be related to the Oxford wares.

Neither of the third century assemblages, Groups 11 and 12 produced any pieces in this ware. Group 13, dated early to mid fourth century AD, contained a single sherd, 0.75% of 133 pieces. This is a small handle fragment in Fabric 40a (Fig 20, 25) decorated with incisions, possibly copying the Oxford fashion of decorating the handles of jugs and flagons in such a manner (c.f. Young 1977, Fig 54, C2/15.6).

Unstratified groups at Wymbush produced a wide-mouthed jar or bowl and copies of a Dr.31/18 and Dr.36 in this fabric. Rim sherds of a Dr.36 copy, No 2, and a flanged bowl, No 3, came from the Bancroft villa topsoil. Ditch L at Bancroft also produced a beaker with a near-vertical neck, No 1, in Fabric 40a, unfortunately the assemblage is heavily contaminated and undateable.

Despite some variants, samian bowl forms appear to have been the dominant vessels in this fabric. It is possible that the bowls were completely colour-coated but on one of the necked jars/bowls, a surface find No 4, from site MK101, Bradwell, the colour appears to have been applied as a painted horizontal band.

Fabric 40 is totally absent from the mid to late fourth century groups. Although there are obviously many factors which may have brought about its eventual demise it is possible that the greater availability of orange-coated Oxford and colour-coated Nene Valley wares in the fourth century was a major cause.

Fig 51, 1–5

1. Fabric 40a MK105 (199) first to fourth Cent. context.
2. Fabric 40a MK105 (425) topsoil.
3. Fabric 40a MK105 (313) topsoil.
4. Fabric 40b MK101, undated.
5. Fabric 40a MK211/61, late second to third Cent. context.

ix Orange Wares Fig 51

Fabrics 41a, 41b, 41c, 41d, 41e, 41f, 41g, 41h, 41j, 41k and 41m

Fabric 41 encompasses many differing orange-wares, none of which occur in any quantity. The forms are varied, ranging from large wide-mouth necked bowls or jars through bottles to indented beakers. The date range is also large, spanning the second to fourth centuries AD.

In Group 5, dating from the early second century to its third quarter, mixed orange wares equalled 2.08% of the 384 sherds, unfortunately composed of indeterminable body sherds. It was not found in the earlier stratified groups (first to earlier second century) which *may* suggest that the popularity of these orange wares began or increased towards the middle of the second century. The reign of Antoninius Pius (138–161 AD) was a period of prosperity and it may be that these tablewares – beakers, flagons and a small number of samian copies – reflect this situation.

The site at Caldecotte, predominantly first to late second century in date, produced a number of these orange wares; for example the rim of a fine, soft cornice-rimmed beaker in Fabric 41d No 9, came from a second century feature (F111); feature F77 of the same date produced a coarser beaker rim No 10, in Fabric 41h, whilst layer 163 contained a flagon rim, No 27, and feature F90 a possible Dr.33 copy, No 18.

A small neat ring-necked flagon rim, No 28, also in a coarse 41h, and very similar to the Caldecotte example came from the topsoil at Stantonbury; it varies in having the remains of a white slip. Such vessels were commonly seen in Verulamium where they are thought to be of local production (Frere 1972, Fig 116, 559). The Milton Keynes examples may be local copies.

The large mid to late second-century assemblage Group 6 produced 2.83% in Fabric 41, out of 847 sherds. This is composed of body sherds, mainly from beakers, some with dark brown washes. However there are two rims, both in Fabric 41b, (Fig 13, 58 and 77).

Another second-century deposit (MK301/88) produced a very fine ring-necked flagon rim in Fabric 41d, No 29. Fabric 41e was not found in such an easily dateable deposit, although the Dr 18/31 copy No 19 came from a largely second century group at MK297 Woughton. The copy of the Dr 36, No 20, with a dark orange slip in 41e came from the topsoil at Bancroft villa.

The cups/beakers in Fabric 41a are unstratified and undated. The plainer vessel No 12 was found

during fieldwork at Broughton on the eastern side of Milton Keynes (Petchey 1978, Fig 4,2) and the small grooved vessel, No 13, was a topsoil find at Holne Chase MK45. Both pots are extremely well made, especially the former, which does not appear to be mica-dusted as has been suggested (Woodfield 1978, 643). Holne Chase also produced a number of small fine orange jar or bowl rims, Nos 24 and 25, similar to an even finer jar or beaker rim from Wood Corner, No 26. All these are in Fabric 41h, which despite being sandy can be fairly fine, and this may account for their poor survival rate and the consequent lack of complete specimens for illustration.

A bottle rim, No 31, also in a fine 41h, came from a stratified late second/early third century deposit at Wood Corner MK64 F19. Group 9 of the same date at Wymbush produced a single body sherd in 41j, which equalled 0.79% of the 126 sherds. Plain rimmed rouletted beakers, Nos 14–16, in Fabric 41d came from the predominantly mid to late second-century ditch T9 at Holne Chase; similar vessels from Brixworth in a smooth buff orange ware were dated late second or first half of third century AD (Woods 1970, Fig 21, 148).

The Willen ditch, Group 10, late second to mid third century, produced two body sherds (1.66%) in Fabric 41h, whilst the mid to late third-century Group 11 contained the larger quantity of 3.09% composed entirely of pieces of a jar or bowl in Fabric 41f (Fig 18, 8). Group 12 was devoid of any pieces of Fabric 41, whilst Group 13, early to mid fourth century in date, produced the fairly large percentage of 4.51% in Fabric 41k and 41j; however it did not contain any rims or pieces of diagnostic form. The single sherd in Group 17 may be residual.

It appears that up to the early or mid fourth century, orange wares continued to be produced in small quantities, although there may have been a break in the later second century. Many of the later pieces resemble the triangular-rimmed jars of Fabric 2, whilst others continued to imitate samian forms. These tend to be thicker than earlier copies. They are generally in Fabric 41d which at this date is coarser than before, having sparse large red and white 'lumps' which could smear to produce streaks across the surface of the pot. This is seen very clearly on the base of a Dr 36 copy from Wood Corner. Another samian copy in Fabric 41d came from the topsoil at Wymbush; this was a miniature Dr 38. It was originally thought to be an odd Oxford product, a C.109 (Young 1977, 174) but Dr Young, who examined it, felt that the vessel was not from the Oxford kilns.

The Bradwell Abbey Barn site, dated second to fourth century, produced a number of vessels in Fabric 41 (Niblett 1974, 483–500). One of these, in Fabric 41d, was very like the small Holne Chase beaker mentioned above whilst another was a large orange-red beaker in Fabric 41h (Niblett 1974, Fig 5, 45 and Fig 4, 28 respectively); the angle on the latter illustration is incorrect, cf No 11. Bradwell Abbey Barn also produced a small bead-rim bowl in a hard burnished 41b, No 21, and a flagon with a wide disc rim in 41d, No 30. Although the latter is an Oxford form and in a rather soft orange fabric it is not from the Oxford kilns, although the dating may be the same as the relevant Oxford form (C.4, floruit from the mid third to the mid fourth centuries, Young 1977, 148).

The site at Wood Corner MK64 produced two flagon/bottle rims in the bland, seemingly untempered 41m. One is a cup-rimmed vessel and the other has a flared everted rim, Nos 32 and 33. Neither were stratified, but the site spans the years of the mid second to the fourth century. A comparison of the cup-rimmed flagon to the similar Oxford form, the C2.2, gives a possible date of 300–400 AD (Young 1977, 148).

Owing to the diversity of the orange wares it is not always possible to place sherds in any of the specified categories, nor to date them. Such diversity also suggest that they are not the product of one particular workshop.

The illustrations show the range of vessel types. The dates given refer to contexts, unless otherwise stated.

Fig 51, 9-34

9. Fabric 41d MK44 F111 A (1), second Cent.
10. Fabric 41h MK44 F77 (1) predominantly late first to third quarter second Cent.
11. Fabric 41h MK63 C.6 late second to late third Cent.
12. Fabric 41a Broughton Old Covert, unstratified.
13. Fabric 41d MK45 unstratified.
14. Fabric 41d MK45 AA T9, predominantly mid to late second Cent.
15. Fabric 41d as 14 above.
16. Fabric 41d as 14 above.
17. Fabric 41h MK100 D2 mid/late second to late third/early fourth Cent.
18. Fabric 41d MK44 F90 A(1) second Cent.
19. Fabric 41e MK297 unstratified.
20. Fabric 41e MK105 (221) topsoil.

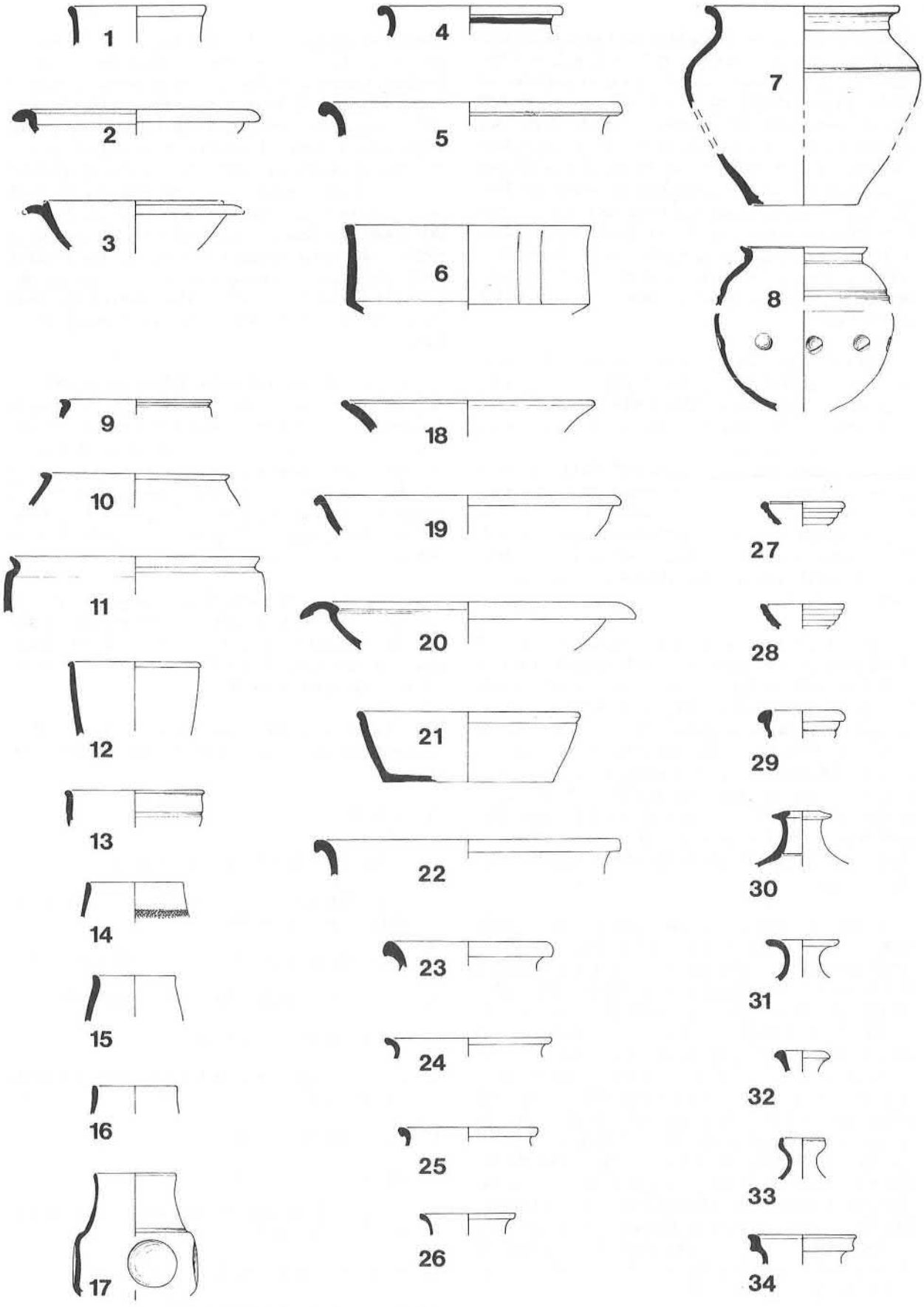

Figure 51: Cream Orange Ware, Fabric 40, nos. 1–5, First Century Fine Ware, Fabric 44, no. 6, Hard Sandy Ware, Fabric 42, nos. 7–8; Orange Wares, Fabric 41, nos. 9–34, (Scale 1:4).

21. Fabric 41b MK63 C.6. late second to late third Cent.

22. Fabric 41f MK211/17 rubble.

23. Fabric 41c MK301 S1 (1) disturbed second ground level.

24. Fabric 41h MK45 unstratified.

25. Fabric 41h MK45 A/C V2 largely second Cent.

26. Fabric 41h MK64 P29 topsoil.

27. Fabric 41h MK44 L.163 predominantly first with some second Cent.

28. Fabric 41h MK301 S1 (+) topsoil.

29. Fabric 41d MK301/88 early to third-quarter second Cent.

30. Fabric 41d MK63 C5 late third to early fourth Cent.

31. Fabric 41h MK64 F19 late second to early third Cent.

32. Fabric 41m MK64 P97 topsoil.

33. Fabric 41m MK64 P25 topsoil.

34. Fabric 41h MK301 S1 F114 second to fourth Cent.

x Hard Sandy Ware Fig 51

Fabric 42

Only two vessels have been found in this fabric; a fairly simple necked jar, No 7, and a globular beaker, No 8, the latter crudely decorated with fingernail impressions. Neither pot came from stratified deposits; the former was retrieved from ditch F165 at Caldecotte, a feature largely dating to the mid first to mid second century and the latter came from ditch T9 at Holne Chase, an essentially mid to late second century deposit with residual and intrusive elements.

The vessels are believed to be local due to the similarity of the fabric to medieval Brickhill wares and coarser examples of Fabrics 47 and 32.

Fig 51, 7–8

7. Fabric 42 MK44 F165 B (3) mid first to mid second Cent. context.
8. Fabric 42 MK45 AA T9, predominantly mid to late second cent. context.

xi First Century Fine Ware Fig 51

Fabric 44

One rim sherd and a body sherd have been found in this fabric. In form, fabric and decoration the pieces are unusual.

The straight-sided bowl form, with flattened rim, No 6, came from the topsoil at Cotton Valley MK71. By analogy to the Rushden vessels (Woods and Hastings 1984, Fig 9,7) it is possible to surmise that it may once have had 'feet', a fact which would make it an even more unusual find. It is interesting to ponder on why such an apparently poor site as Cotton Valley should produce not only this rare find but the very fine mica-dusted embossed jar (Fig 7, 42) found in Pit G8. Neither vessel appears to be local in origin. The remainder of the pottery from the site consists of the typical 'Belgic' grogged and lid-seated shelly jar assemblage.

At Rushden the pottery that resembles the above belongs to Period III. This phase consists largely of kilns and the resultant pottery; the workmanship is attributed to a group of 'Intrusive Potters'. Although the date of the brooches found associated with the pottery defies further refinement than 45–60 AD, the 'Intrusive Potters' stay need not have lasted more than a few months (Woods and Hastings 1984, 11). A similar date range would be acceptable for the straight-sided bowl.

The body sherd (not illustrated) is unfortunately an unprovenanced find. The fabric and type of decoration do however link it firmly with the bowl described above and it is probably of the same or similar date range.

Fig 51

6. Fabric 44 MK71 (.001) topsoil, vessel probably mid to late first Cent.

J: IMPORTED WARES

i Mortaria

See pages 132–133.

ii 'Rhenish' Colour-Coated Ware Fig 53

Fabric 7

This was a fine tableware, imported from Central Gaul and the Rhineland. Its manufacture is closely associated with that of *terra sigillata* or samian (Fabric 20) (Symonds 1981, 364).

Dr Symonds examined a total of seventy-seven sherds of 'Rhenish' ware from this unit; he was able to attribute about half of these to Central Gaul, most being from Lezoux, although at least one base of a beaker (Fig 16, 13) was probably from one of the other Central Gaulish workshops, such as Vichy or Toulon-sur-Allier. All of these are therefore mid to late second century AD. Of the remainder three are probably from Trier and are therefore early-to-mid third century in date, whilst the remaining

pieces cannot with any certainty be attributed to either place of manufacture.

The occupation layer at MK313 Group 7, dated late second century, produced two sherds from a folded beaker in 'Rhenish' ware (1.02% of 195 sherds). It also contained part of a black Dr.33 cup, perhaps better considered as black samian, the rim of which was found in the topsoil over the site. This is an extremely unusual form for this fabric (Fig 52, 28); it has been seen by Dr Symonds and Mr Hedley Pengelly who agree that the sherds are not merely that of burnt samian.

The late second to early third-century stratified group at Wymbush, Group 9, produced the Vichy or Toulon-Sur-Allier base mentioned above plus a barbotined body sherd, and four pieces of a folded beaker (4.76% of 126 sherds). 'Rhenish' ware was common at Wymbush (Fig 53, 1–5); sixty sherds in all were recovered, probably from six different vessels – these being three barbotine beakers (one large variant), one folded beaker, one cup and a beaker with unknown decoration. A 'Rhenish' ware body sherd with single and double bands of rouletting was also found in the early to mid fourth-century ditch group 13.

A rim and body sherds with unusual decoration were retrieved from the Bradwell Abbey Barn site (MK63). This beaker is covered with barbotine lumps, giving the vessel a somewhat hedgehog-like appearance (Fig 53, 6).

Wood Corner MK64 produced pieces of a possible cup, a beaker and a folded beaker. Two of these have been subjected to chemical analysis and found to come from the Trier area rather than Central Gaul; they date to the early to mid third century.

The topsoil at Bancroft MK105 (426) also contained a sherd from Trier; the sherd, a beaker rim, was chemically tested. A body sherd from the topsoil has not been assigned to a place of manufacture.

Stantonbury, so far, has only produced a single indented body sherd, from a rubble area MK301/F126. The scarcity of this ware at Stantonbury is unexpected, as the ware, though found infrequently, is not rare.

Fig. 53 Fabric 7, 1–6

1, 2. MK211/20, layer of topsoil and rubble.

3. MK211/31, as No 1.

4. MK211/20, as No 1.

5. MK211/64, predominantly late second to early third context.

6. MK63 C.7, late second to late third Cent context.

iii Lower Rhineland? Fabric I

See page 137.

iv Central Gaulish Metallic Black Slipped Ware

See page 137.

v Central Gaulish (St. Rémy) Lead-Glazed Ware

See page 136.

VI THE SAMIAN WARE By Hedley Pengelly

Fabric 20, Fig 52

The samian ware from Milton Keynes is

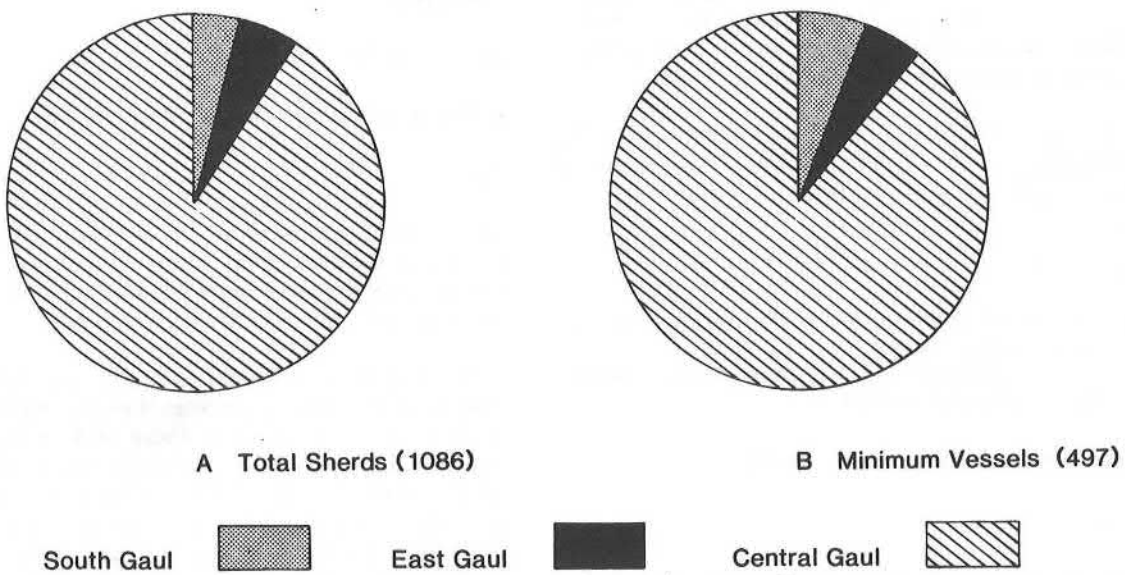

PIE CHART 18: Samian ware. Percentages of the main wares.

presented in two parts: the first deals with the supply, distribution and quantification of the samian as a whole, the second describes and quantifies the samian from each site.

The mode of discovery of this material varied widely, and the total samian examined can only represent a random sample of that class of pottery imported into Roman Milton Keynes. This pottery, much of which is in small sherds, ranges in date from the mid first century AD to about the first half of the third, with supply reaching a peak in Antonine times. In total, it is unremarkable, though two individual finds are worthy of note, one a Dr 33 with a black slip (No 28) from Group 7, Saxon Street MK313 (page 29), the other, from Little Woolstone MK 109, some moulded sherds (Nos 29–31) of an uncertain continental origin. These are described on pages 156 and 168 respectively.

IA SUPPLY AND DISTRIBUTION

Milton Keynes was supplied with samian from three main areas, in the amounts shown in Pie Chart 18 and Tables 7 and 8. Incidence of samian from individual potteries is shown in Table 9. The chronological distribution of attributed potters' stamps is shown in Table 10,and of attributed decorated ware from Lezoux in Table 11. Quantification of identified vessel forms is in Tables 12–15.

South Gaul
The South Gaulish samian, much of which is in small single sherds from different vessels, is in fabrics consistent with origin at La Graufesenque from the mid first century AD to the late first/early second centuries. Apart from a Dr 29 sherd of Claudian date from Woughton MK297, this pottery forms a small, basically Flavian collection, including decorated ware stylistically linked to a bowl, stamped by Cotoius, some work of the Germanus school, or a related potter, and the Mercator-Biragillus group. There are no potters' stamps from La Graufesenque.

Central Gaul
In early second-century Milton Keynes, there is a sparse amount of samian, including one decorated sherd, from Les Martres-de-Veyre, and a plain sherd in the pre-main-export fabric of Lezoux; of slightly later date a Dr 31 is probably from the Ligonne pottery on the outskirts of Lezoux. From about the mid 120's Lezoux becomes the chief source, as usually in Britain, and accounts for about 90% of the total samian examined. However, the amount of decorated ware from that centre is very small and the number of attributable sherds comensurately so. Only one Central Gaulish decorated bowl is in a significant amount, namely a Dr 37, from the Vichy (Terre Franche) workshop?, and connected with Cinnamus and the Sacer group.

Of the eleven Central Gaulish potters' stamps recorded, ten are firmly Antonine and one, an unattributed fragment, Hadrianic or early Antonine.

East Gaul
The attributed decorated ware and stamps belong to Rheinzabern potters of the late second and early to mid third centuries. Ianu(arius) I and Reginus I, among the earlier of these, are represented by one and two moulded sherds respectively. The slightly later Comitalis IV has two decorated sherds (both from the same bowl) and Helenus(?) one small 'ovolo' sherd. Two of the three stamped plainware vessels are in substantial amounts, as is a bulbous jar or beaker, with barbotine leaves, from Rheinzabern. Two small Dr 27 sherds are in early East Gaulish ware, but their fabric is not attributed to any one pottery.

IB QUANTIFICATION OF FORMS

A quantified summary of the identified forms is given in Tables 12–15. All forms are Dragendorff except where stated: De'ch - De'chelette, Lud - Ludowici, Walt - Walters. Forms are grouped in the following order of status/basic type: A - forms with moulded decoration, B - barbotine, C - incised; D - plainware cups, E - dish and dish-bowl forms (form numbers with suffix R - with a band of rouletting inside the base), F - deep-sided bowls with externally flanged or cordoned wall, G - gritted mortaria, H - plain sherds from jars/flagons.

IIA METHOD OF PRESENTATION

Full reports on the samian from each site are held in the Unit's archive. In what follows the small site lots are published more or less as they stand and the large ones selectively. All the potters' stamps are included, as is the samian from certain of the numbered groups. For the former, detailed information has been kindly provided by Miss Brenda Dickinson of Leeds University, and the potter and Die numbers used are from the forthcoming Leeds Index of samian potters' stamps. In this, potters bearing the same name are distinguished by lower case Roman numerals (this system of numbering is to be distinguished from those of Stanfield and Simpson 1958 for Central Gaul and Ricken 1948 for Rheinzabern, both of whom use upper case Roman numerals).

A description of the samian from each numbered group is placed at the beginning of the listing for the site at which it occurs. The entry numbers in the listing refer to the archive reports. Standard abbreviations used are: C.G. = Central Gaulish; E.G. = East Gaulish; S.G. = South Gaulish; O. followed by a number refers to an Oswald figure-type (Oswald 1936–7). A quantified summary of the identified forms from each site is given in Tables 16–19.

IIB THE SAMIAN FROM EACH SITE

Kiln Farm MK25

The samian comprises form 33, Hadrianic or Antonine, and forms 37 (with eroded decoration), 33 and 31, Antonine. C.G.

Holne Chase MK45

The small amount of samian is C.G., with a date range Hadrianic/Antonine to late second century, and includes several plainware vessels in substantial amounts, two of them stamped:

1. Form 33, stamped MATTI.M by Mattius ii of Lezoux, where the die (4a) is known to have been used. The stamp occurs on form 33 from recent excavations at Lezoux. It is also known from Caerleon, Newstead and Mumrills. c. 140–170 AD. *A/A T9.*

2. Form 18/31, stamped [CV]CCILLI by Cuccillus i who worked at Lezoux, though this particular die (6a) is not known there. The stamp is known at Corbridge (Antonine) and in an Antonine group at Horsey Toll, Cambs. (formerly Hunts.). Other dies are represented in the Wroxeter Gutter deposit and at Halton Chesters, to mention only dated sites or groups. c. 150–180 AD. *A/A T9.*

From the same ditch context (see R.M.K, 31–32)as the two stamped vessels came a substantial amount of a large dish, form Walters 79, mid to late Antonine, and sherds of three form 33, Antonine. Other samian from the site includes the base of an Antonine form 37.*A/B T5.*

Wood Corner MK64

The date of this samian, much of which is either residual or unstratified, or from the topsoil, is: Flavian (1 South Gaulish vessel), followed by a gap, then: Hadrianic-Antonine to late second century (44 Central Gaulish vessels); late second to third century (6 East Gaulish vessels). Some of the Central Gaulish vessels (including forms 36 and Walters 79, of mid to late Antonine date) are burnt, as is a mortarium, of the end of the second century, and a late Antonine jar or flagon, from East Gaul (RMK 1987, 55). The latest samian from this site is a stamped plainware dish, from Rheinzabern, c. 180–260, and an East Gaulish mortarium of broadly similar date. The following samian was useful for dating specific contexts:

43. Form 18/31 or 31 sherd. C.G. Probably Hadrianic or early Antonine. *Phase 1/below hearth F11* (RMK 1987, 55).

37. Form 45 sherd with rivet hole. C.G. c. 170–200 AD. *Phase 1/Stony top fill F2* (RMK 1987, 55).

Other samian from MK64

Only the potters' stamps and certain of the decorated ware are described below.

Potters' stamps

57. Form 31 sherd stamped GENI[ALISF] by Genialis iv of Lezoux, where the die (6c) is known to have been used. Three examples of the stamp are in a pit-group of the 150's at Alcester, two on form 18/31R. Later stamps occur at Chester-le-Street, and on the dish and cup forms Walters 79 and 80. c. 150–170 AD. *P2 AS Topsoil* (Fig. 52, 1).

66. Two sherds of an E.G. form 31 (Ludowici Sa), stamped [PR]IMITIVOSF by Primitius/Primitivus of Rheinzabern, where the die (3b) is known to have been used. This stamp appears more often on decorated ware, much of it probably belonging to the third century. There is one example from Holzhausen. c. 180–260 AD. *P5 AP (x) and T2 (x).* (Fig. 52,2).

Decorated ware

Whilst none of the decorated ware was useful for dating individual contexts, or of particular intrinsic interest in itself, all decorated sherds capable of illustration have been listed. The two sherds of an S.G. form 37 bowl (No. 44) perhaps suggest first-century occupation nearby.

44. Form 37, S.G. Two sherds show a band of fine S-shaped gadroons at the bottom of the decoration. c. 75–90 AD. *Residual in F2 and unstratified.* (Fig. 52, 3).

38. Form 37, E.G., three sherds, one decorated, of a bowl in the style of Ianu(arius) I of Rheinzabern. His ovolo (Ricken and Fischer 1963, E19), putto (*ibid.*, M263) and cable borders with junction rosettes (*idem.*, 041). For the cable borders used in a similar way, *cf.* Ricken 1948, Taf. 2,8. and 9. and for the ovolo and *putto* see Taf. 6,12. c. 160–180 AD. *F15 (Sq. AR)/unstratified.* (Fig. 52, 4).

48. Form 37 sherd, in the style of Censorinus of Lezoux. For the dolphin (O.2382) and leaf ornament (Rogers 1974, L12) see Stanfield and Simpson 1958, pls. 101, no. 5 and 102, no. 18, from stamped moulds. For the Apollo (O.92) see Karnitsch 1959, Taf. 45, no. 3. c. 160–190 AD. P1 Topsoil *(Fig. 52, 5).*

64. Two joining sherds of a shallow, thin-walled 37, in micaceous Lezoux ware with poor, blotchy slip. The roped panel dividers, medallion (Rogers 1974, E18), gartered column (*ibid.*, P3) and sea-horse (0.33) were all used by Paternus II, and by his contemporary Iustus whose work is sometimes very similar. The plant motif in the festoon is like that on a stamped Paternus II bowl from Watercrook (Stanfield and Simpson 1958, pl. 105, no. 16), but the stem, like the gartered column here, is somewhat distorted, from the mould. c. 160–190 AD. *Topsoil* (Fig. 52, 6).

Windmill Hill MK96

The minute amount of samian comprises single sherds each of C.G. forms 33, Hadrianic or Antonine; 36, mid to late Antonine and, from Gulley 1, Curle 23, late Antonine. Two nondescript plain sherds are C.G., probably Antonine and one other late second century.

Sherwood Drive MK100

The date of this samian are: late first century, probably (1 South Gaulish dish); followed by a

gap, then: Hadrianic or early Antonine (1 East Gaulish cup); Hadrianic/Antonine (2 Central Gaulish vessels); Antonine (6 ditto); mid to late Antonine (4); late second century (2); eight vessels from East Gaul are mostly late second to third century including, from Ditch 2, two stamped Rheinzabern dishes and a barbotine-decorated bulbous jar or beaker in substantial amounts. Apart from the early East Gaulish cup noted above, and a deep-sided bowl and two heavily-used mortaria, in Central Gaulish fabric, the plain wares from the site are all dish and dish-bowl forms. The following samian was useful for dating specific contexts:

Ditch 2

11. Sherd, slightly burnt, of an E.G. bulbous jar or beaker with barbotine decoration of bold, pointed leaves. Outer half of fabric orange, inner half slightly purple. Slip orange-red, blotchy. Rheinzabern ware. Late second or early third century. *D2/CA*. Also *D2/CB2* (one more sherd) and *D2/C2* (three more sherds, joining on).

13. Sherd, perhaps slightly burnt, of a C.G. Walters 79 or Ludowici Tg, with high, rectangular footring showing considerable wear. Late Antonine. *D2/CB 2*.

15. Three joining sherds of a large form 36, in pale fabric with poor, orangy slip: stamped PATER[IANVS] by Paternianus ii of Rheinzabern, where the die (1a) is known to have been used. There is no site-dating for this potter, but his use of the late forms Ludowici Sa, Sb, Ta and Te, suggests late second or early third century date. *D2/CB3*. with five additional sherds joining on from *D2/CB2*. (Fig 52, 7).

16. Form 38, E.G. One sherd, slightly burnt, or soil stained, of a thick-walled bowl with shallow fluting on the underside of the flange. Probably Rheinzabern ware. Antonine. *D2/CB3*.

17. Rim sherd of form 37 (or 30). C.G. or E.G. Antonine. *D2/CB3*.

18. Form 37 sherd, C.G. The ovolo is eroded, but is almost certainly ovolo 3A or 3B of Cinnamus and associates (cf. Simpson and Rogers 1969, Fig. 1). c. 145–175 AD. *D2/CE*.

19. Form 38 or 44, rim sherd. Antonine. *D2/CE3*.

20. Form 45, or less likely 43, C.G. One sherd of a heavily-used mortarium. c. 170–200 AD. *D2/CE3*. Two other sherds from *A2/W1*.

21. Form 45, C.G. One sherd of a second heavily-used mortarium. c. 170–200 AD. *D2/CE5*. Two other sherds *unstratified*.

22. Form 31, E.G., two joining sherds. Fabric similar to No. 11 above. Probably late Antonine; possibly late Antonine to early third century. *D2/C1*. Additional sherd from *Ditch 3 (R1/D3)*.

23. Three joining sherds of a large dish (form 32?) with fabric and slip like No. 15 above,affected by acid in the soil. This dish is stamped IVLIAN[. The potter is Iulianus iii almost certainly, despite the apparent A after the N in the stamp. Iulianus iii worked at Rheinzabern, though this particular stamp has not been found there. His plain forms include 31R (Ludowici Sb) and 32 (probably the form here). The style of his decorated ware suggests an early third century date, though a late second-century start is not impossible. *D3/C2*. Additional sherd, giving part of the stamp, from *D2/1*. (Fig 52, 8).

Ditch 3

28.See No. 22. *(Ditch 2)*.

Ditch 6

2. Form 18/31 sherd. C.G. Hadrianic-Antonine. *A2/D6*.

3. Form 37. Two joining sherds of a thin-walled bowl with pale fabric, orange-red slip and lead rivets, largely decayed. The ovolo is probably Ricken and Fischer 1963, E25/26, used by numerous Rheinzabern potters, including Comitalis IV. The captive and guard (*ibid*. M269) were also used by him, and by Primitivus I, who also used the rosette (*idem*. 049). For similar work see Ricken 1948, Taf. 87,5. and 11; 88, no.10 Cf., also Hartley and Pengelly 1976, No. 84. c. 180–220 AD. *A2/D6*. (Fig 52, 9).

Bancroft Villa MK105

The samian ware from Bancroft villa will be published in full in the final excavation report. Here, only the potters' stamps, and an intrinsically interesting decorated bowl from the destruction of Building 1 are listed. The small amount of samian from the excavation of 1973–74 has already been published (Green 1975, 9) and a form Dr 29 sherd, mid first century, from the 1977 season, has been published, in its capacity as a spindle whorl (RMK 1987, 145, No. 191). This sherd was not available to the present writer in time for inclusion in the statistical analysis of the Milton Keynes samian.

Potters' stamps

71. Burnt. A substantial amount (in joining sherds) of a large form 38, stamped VXOPILLI.M. A stamp of Uxopillus of Lezoux, where the die (4a) is known to have been used. Apart from Lezoux, this stamp occurs in one of a series of large pit-groups, of the 150's, at Alcester, in a burnt group, of the 160's, at Tác (Hungary) and at Newstead. Uxopillus was primarily a mid to late Antonine potter, but the evidence from Alcester and Tác, suggests that the die used here was one of his earlier ones. c. 150–170 AD. *Destruction, Building 1/Burnt Area A/Room 5, Walls 6, 7 and 8 (robbed)/ Rubble* . (Fig 52,10).

122. Heavily burnt. A sherd from a thick-based form 33, stamped MOSSI. [M] by Mossius ii of Lezoux, though the die (2b) is not known there. Other

stamps of his occur in dated contexts in Northern Britain, at sites such as Benwell, Catterick, South Shields and Malton. Mossius's output was mainly mid to late Antonine, though he occasionally made form 27 (indicating activity before c. 160). The probable range is c. 155–180 AD. *Destruction rubble, Building 1.* (Fig 52, 11).

123. Burnt. Sherds of a large dish of form 31R, with the slip worn away from within the footring. Part of a stamp reads: CAS retr. Unfortunately, this fragment of stamp does not fit any known dies, though the end of a stamp, at Rheinzabern, (but Central Gaulish), with very similar letters, reading]RIVS retr. has been noted. The answer may be that this is a stamp of Casurius ii, though there is no overlap to check it. However, it must be Central Gaulish, and mid to late Antonine. *Destruction rubble Building 1 and topsoil.* (Fig 52, 12).

232. Heavily burnt. Form 31R sherd, with a fragmentary stamp of Advocisus of Lezoux. The precise die is uncertain and does not match any previously recorded stamps of Advocisus. The possible reading in full is ADVOCISI.O, c. 160–190 AD. *Stone features (500) Outbuilding 2.*

Decorated ware

91. Heavily burnt. Form 37. C.G. Fourteen sherds of a slightly unusual panelled bowl showing a rosette-tongued ovolo, a plain festoon, a rare leaf-tip, a composite motif (Rogers 1974, Q6), sinuous gadroons (*ibid.*, U152) and a dolphin head (possible O.2393). All of these are spread among the repertoirs of Cinnamus and members of the Sacer group. The rare leaf-tip (not in Rogers, but see Stanfield and Simpson 1958, pl.163, 68) and sinuous gadroons were used by Cinnamus and they, and the festoon panel are on a bowl in one of his styles from Segontium, with, possibly, this ovolo (Wheeler 1924, fig.71, 30). Cf. also a bowl from Néris-les-Bains (Piboule 1982, Table 39E). The composite motif (Q6) is attested for Cinnamus, including use at the Vichy (Terre Franche) workshop (Vauthey and Vauthey 1963, 48) and Drusus II though not common for either potter. The dolphin (0.2393) was used by Cinnamus (?), Drusus II, Sacer and Attianus. The ovolo is uncertain due to the burning and other damage. It might be the one on a stamped Cinnamus sherd from Terre Franche (Brenda Dickinson, pers. comm) or one of Drusus II's (Stanfield and Simpson 1958, fig. 20, 1 which differs from their pl. 89, 12). This bowl with its mixture of features adds another link to the interconnections between Cinnamus, the Sacer group, and the workshops at Lezoux and Terre Franche. c.145–170 AD. *Destruction Building 1/Burnt Area* B (1 sherd)/Rubble (10 sherds; *Ditch D, top layer, rubble* (1 sherd); *Ditch E* (1 sherd); Surface Cleaning 23 (1 sherd). (Fig. 52,13).

Little Woolstone MK109

Much of this samian is from ditch contexts and includes, from *F12 Ditch/44*, some remarkable moulded sherds of uncertain origin (page 168). The other samian forms a small collection of plainware from Central Gaul:

Samian from dated contexts referred to in Excavation Report (RMK 1987,79-82)

7. Form 31 sherd. Antonine. *F12 Ditch/44*

8. Form 31 sherd. Antonine. *F12 Ditch/56*

6. Small sherd of a very thin-walled cup. Blotchy finish; slightly burnt. Probably from Les Martres-de-Veyre and Trajanic. *F16 Ditch/30.*

9. Form 31 sherd. Antonine. *F57 Soil layer in Trial Trench.*

Other samian from MK109

Two sherds from different vessels, Hadrianic/Antonine, and forms 31 (two) and 31R, Antonine. *Topsoil.*

Wymbush MK211

The small amount of samian includes a plainware sherd from Group 9, some other Central Gaulish ware (Hadrianic or early Antonine to late Antonine) and a plainware dish from Rheinzabern.

Samian from Group 9:211/84

7. Form 31 sherd. Antonine.

Other samian from MK211 includes:

4. Form 33 sherd, Antonine. Sherd residual in Group 13: *211/57.*

6. Three small flakes join, of an E.G. dish, probably Ludowici's form Tb (Oswald and Pryce 1920, pl. LIX, No. 2 etc.). Rheinzabern ware. Second half of second century. *211 Ditch 76.*

Willen MK269

Samian from Group 10: Roman Ditch P18

4. Seven eroded sherds of a form 31R in C.G. fabric: stamped SEXT[---. Presumably the mid to late Antonine Sextus v of Lezoux. c. 160–200 AD.

8. Two sherds of a form 38. E.G. Probably Rheinzabern ware. Late Antonine or early third century.

5. Form 31R sherd. C.G. Late second century.

7. Form 31R sherd in Lezoux fabric; slightly overfired. Antonine.

6. Form 18/31–31 sherd. C.G. Antonine.

Other samian from MK269

1. Form 31 sherd. C.G. Late second century. *Area 1 P6*

2. Dish sherd. C.G. Antonine. *Area 1 P6*

3. Eroded scrap. C.G. Second century. *Area 1 P14*

Woughton MK297

This batch of samian comprises a minimum of 101 different vessels, ranging in date from the mid first century to the late second. Apart from a Claudian form 29, the South Gaulish ware from Woughton is basically Flavian in date and includes the attributed decorated ware from La Graufesenque noted above (page 000). The Central Gaulish samian commences with a form 37 from Trajanic Les Martres-de-Veyre. Then come some vessels from Hadrianic or early Antonine Central Gaul, including a form 31 of probable origin at Lezoux, Ligonne, and 25 vessels of Hadrianic or Antonine plainware. At least 65 vessels from Central Gaul are fully Antonine, among them two plainware dishes and a heavily used mortarium from the latter part of the period.

The only definitely East Gaulish samian is a sherd of an Antonine form 38. (Unstratified)

Samian from Group 6: Phase II Area C Pit 31

The samian from this group is mostly C.G., Antonine, including some from the middle to later parts of the period.

Decorated ware

58. Two joining sherds of a form 37, S.G; perhaps slightly burnt. The lion (O.1400) and the other details were used, amongst others, by the Mercator-Biragillus group. A close match for the arrangement of grass tufts and a chevron festoon with rosetted spiral is on a bowl from Reigel with mould-stamp of Biragillus, cf. Knorr 1952, Taf. 6, bottom C; the lion is on *ibid.*, bowl A with the same stamp. c. 85–110 AD. *12 (1) A, 12 (1) D.* (Fig 52, 14).

60. Form 37 sherd. C.G. Hadrianic-Antonine. *12 (1) A.*

59. Three sherds of a small form 37 in the style of Divixtus of Lezoux; his ovolo (Rogers 1974, B12), Bacchus (O.571). Abundance (O.802) and caryatid (O.1199), cf. Stanfield and Simpson 1958, pls. 115, No. 3 and 116, No. 8 c. 140–165 AD. *12 (1) A* (2 sherds), *12 (1) B* (1 sherd). (Fig 52, 15).

87. A burnt sherd of form 37, C.G., with part of an ovolo (Rogers 1974, B223) used by Cinnamus and the Pugnus-Secundus group. c. 150–180 AD. *12 (1) D* (Fig 52, 16).

61. Two sherds of a C.G. form 37 with rivet holes. The identified figure-types of a goat (O.1843), dog (O.1917) and dolphin (O.2401) were, between them, used by a number of Antonine potters at Lezoux. The first two types occur together frequently in the work of Paternus II (cf. Stanfield and Simpson 1958, pl. 106, No. 22), but the dolphin does not seem to have been recorded for him. c. 160–190 AD. *12 (1) A* (Fig 52, 17).

62. Small sherd, C.G., of an enclosed jar or similar with 'cut-glass' facets (Oswald and Pryce 1920, pl. LXXVII). Antonine. *12 (1) A.*

Stamped plainware

92. A substantial amount (in joining sherds) of a form 33, stamped SENNIVSF. The potter is Sennius of Lezoux, though this particular die (1a) is not known from there. The stamp is recorded from a pit-group of the 150's, at Alcester, and from Chester-le-Street. It occurs mainly on form 33, but has been noted also on forms 27, 31 and 38. c. 150–180 AD. *12 (2) B*; one sherd from *12 (1) B.* (Fig 52, 18).

The other plainware from this group comprises an S.G. form 18 sherd, slightly burnt, Flavian (No. 77) and the following, in C.G. fabric:

Cups

74. Form 33 sherd. Hadrianic or early Antonine.

83. Form 33 sherd. Probably late Hadrianic or Antonine.

89. Form 33 or 46, base sherd slightly burnt. Hadrianic or Antonine. 68. Form 27, six sherds of a well-worn cup. Antonine. Joining sherd from Plough Furrow 7 (1).

56. Form 33 sherd. Antonine.

69. Form 33, two sherds. Antonine.

70. Form 33, two joining sherds and one other. Antonine.

71. Form 33 sherd. Antonine.

Dishes and Dish-bowls

80. Dish sherd, form 36 etc. Hadrianic or Antonine.

82. Form 18/31 or 31 rim sherd. Hadrianic-Antonine.

66. Form 31 sherd. Probably early to mid Antonine. Joins onto two sherds, slightly burnt, from *Plough Furrow 8 (1)*; matches one sherd, *unstratified.*

89. Form 31 sherd. Mid to late Antonine.

57. Form 31 sherd. Probably mid to late Antonine. The following items were all Antonine:

78. Form 31, six joining sherds.

63. Form 31, three joining sherds.

64. Form 31, three joining sherds.

67. Form 31, two joining sherds.

65. Form 31 sherd.

90. Form 31, footring sherd.

91. Form 31, burnt sherd. Possibly same dish as last.

(The proportion of C.G. cups to dishes and dish-bowls from this group is about 1:1.5)

Other forms

72. Form 36 or Curle 11, rim or flange sherd. Hadrianic or Antonine.

73. Form 38, two joining sherds of a large bowl. Antonine.

81. Enclosed form sherd. Antonine.

Samian from Group 8: Phase II 24 Building 6 Between Areas A and C

This comprises a small collection of C.G. plainware products as follows:

40. Form 31. Sherd of a large dish with pale fabric and smooth, 'silky' slip, and with a base that is considerably thickened towards the footring, the inside of which is 'stepped' and carries close-set medial grooving. This is an early example of the form, and probably comes from the Ligonne pottery at Lezoux. Hadrianic or early Antonine.

41. Form 18/31 sherd. Hadrianic/Antonine.

42. Form 33a. Sherd of a large, straight-sided cup giving the merest hint of a potter's stamp. Probably early Antonine. Matches sherd, slightly burnt, from *F50/CW6 ?Plough headland.*

43. Form 31 sherd. Antonine. Matches sherd from *Gulley F43 T4/1 (1) Adjacent to Area C.*

44. Form 31 sherd with partly crackled slip. Antonine.

Other samian from MK297

Phase I

1. Form 29, S.G. Small sherd of bowl with fine palish brown-pink fabric, and thin red-brown slip with a slight sheen. Contour well-rounded. Part of the lower zone shows a cockerel (O.2335) betwen a four-petalled flower and a rosette diagonally opposed. Similar work, with stylistic links with Modestus, Murranus, Licinus and others, comes from Strutt's Park, Derby (Brassington 1970, Fig. 2, No. 1) and Tongres, Belgium (de Schaetzen and Vanderhoeven 1955, pl. IX, No. 21). The cockerel occurs on stamped 29's from such sites as Hofheim (Knorr 1919, Taf. 12D: Bassus). Mainz (*ibid.* Taf. 46C: Licinus), Vindonissa (Knorr 1952, Taf. 3A: Aquitanus), Pompeii (*ibid.* Taf. 33E: Labio), Richborough (Bushe-Fox 1949, pl. LXXVI, No. 23: Primus), Southwark (Bird and Marsh 1978, Fig. 30, No 30: Primus) and Laurabuc (Fiches 1978, Fig. 5, No 4: Ardacus). The four-petalled flower is on form 29 from Bregenz, with interior base stamp and mould-signature of Murranus (Knorr 1952, Taf. 44C) and on form 29 from Cluzel 15, La Graufesenque (Haalebos 1979, Taf. 2, III) and La Nautique, Narbonne (Fiches, Guy and Poncin 1978, Fig. 9, Nos 1 and 3).c. 40–55 AD. *Ditch F19/section T1/1* (Fig 52, 19).

Phase II

45. Two sherds of a large form 31R C.G. Mid- to late Antonine. *Gulley F22 Building 7/CW28*

47. Form 18 or 18/31 sherd. S.G. Probably Flavian-Trajanic. *Ditch F64/CW37*

25. Two joining sherds and five others of a form 37, S.G., with rivet holes. The ovolo is double-bordered, and appears to have a tongue ending in a swollen tip or blob, but the detail is very blurred. The panelled zonal decoration includes leaf-tips, wavy lines,a composite floral motif and a kneeling cupid to right; lower down a panel has some corded buds, or gadroons of a slightly unusual sinuous appearance. The kneeling cupid in the upper zone looks like O.501, but is badly damaged and the original die appears to have been partly re-cut. The upper zone as a whole is similar to a form 29 from Bonn, with interior stamp of Cotoius, cf. Knorr 1919, Taf. 27. c. 75–95 AD. *Gulley F43; adjacent to Area C; 4/1 (2)/(3); T4 F1 (2), 2(3), 3(4), 3(5), 3(6).* (Fig 52, 20).

26. Form 37 sherd. Burnt. In the style of Igocatus (formerly X-4) of Les Martres-de-Veyre, cf. Stanfield and Simpson 1958, pls. 17–19; Terrisse 1968, pls. 14–15. The somewhat chipped decoration shows a tier of cups (Rogers 1974, Q48), spiral (*ibid.* S68) and beaded cup (*idem.* U62).c. 100–120 AD. *Gulley 43 T4 1 5 (7).* (Fig 52, 21).

12. Form 33 or 33a sherd, C.G. Fragmentary stamp M. Hadrianic or early Antonine. *Gulley 43 T4 1(2).*

15. Form 31 sherd. C.G. Antonine. *Gulley 43 T4 1(2).* Matches sherd 43 from Group 8 (see above).

10. Sherd of large dish, C.G., with curving wall and concave base. Probably late Antonine. *Gulley 43 T4 1(2).*

Phase II (Area C)

97. Sherd, C.G., of an enclosed jar (Déchelette 72 etc.) with 'cut-glass' decoration, like Oswald and Pryce 1920, pl. LXXVII, No. 3. Probably mid second century. *Gulley 32 18 (1).*

99. Form 38 sherd. C.G. Antonine. *Gulley 32 18 (1).*

98. Form Curle II sherd. S.G. Flavian. *Gulley 32 18 (2).* Matching sherd from *Phase III Gulley 58.*

100. Ten joining sherds give an almost complete form 31, stamped ADVOCISI.OF by Advocisus of Lezoux, where the die (1a) is known to have been used. A stamp of the well-known mid to late Antonine maker of decorated ware, known from Binchester and Hadrian's Wall (Chesters Museum), and on the matching dish and cup forms Walters 79 and 80. c. 160–190 AD. *Gulley 32 20 (1).* (Fig 52, 22).

102. Form 37. C.G. Sherd from below the decoration. Hadrianic-Antonine. *Gulley 35 24 (1).* Cut by *Pit 31.*

105. Form 36 sherd. C.G. Hadrianic or Antonine. *Gulley 38 55 (1)*

40. Form 31 sherd. C.G. Mid to late Antonine. *Pit 62 C* (2)

Other samian

39. Two joining sherds and three others of a form 31 with well-worn footring: stamped GONGI.M by Gongius of Lezoux, though the die (2b) is not

known from there. Gongius's less common stamp giving this reading: recorded, so far, on form 31 (twice) in a pit-group of the 150's at Alcester. His better known stamp (2a) with this reading occurs frequently in Britain, including two examples from Antonine Scotland. Gongius's forms include 27, 18/31, 18/31R, 31 and 38. c. 145–165 AD. *Phase III Gulley 63/CW/11 Building 9.* (Fig 52, 23).

37. Form 15/31 or 15/31R. C.G. One of the latest samian sherds from the site. Late Antonine. Phase *III Gulley 63/CW/11 Building 9.*
67. Form 30 sherd showing panels, with a lion (0.1459 partly impressed) and a tendril. Standard work of Cinnamus of Lezoux. c. 150–180 AD. *Ditch 61 T1/F7.* (Fig 52, 24).

51. Form 37 sherd, with a bear (O.1619) and horse (O.1894) used by Butrio of Lezoux, cf. Stanfield and Simpson 1958, pl. 57, Nos 652 and 654. c. 125–145 AD. *Plough Furrow 6 (1).* (Fig 52, 25).

135. Form 37. S.G. Sherd with lead rivets. This has details used by Germanus and his associates, but the style is somewhat unusual. The large hare appears closest to that on form Knorr 78, from Vindonissa (Knorr 1919, Taf. 39R), the bud tendril is on Hermet 1934, pl. 54, no. 35, and the bear (O.1614) is on Hermet 1934, pls. 101, No 28 and 102, No 46). The wreath is on form 29 from Rottweil (Knorr 1907, Taf.V, 6) and the winged plant is probably that on Hermet 1934, pl. 72, No. 5. The other detail looks like part of a fan-shaped arrangement, perhaps showing the spreading, bladed motif on form 29, from Richborough, cf. Bushe-Fox 1949, pl. LXXVIII, No. 33. c. 70–85 AD *Unstratified/ Roundabout construction.* (Fig 52, 26).

Stantonbury MK301

About 28 per cent of the samian sherds examined from this site are minute. The majority of the samian is Central Gaulish, mostly probably of the second half of the second century, but there is also a plainware dish, of Flavian date and a cup, Flavian or Flavian/Trajanic, from South Gaul, and a minimum of six vessels, late second- to third century, from East Gaul. Two plainware dishes are from Trajanic to early Antonine Les Martres-de-Veyre, and a form Curle 11 is in the pre- main export fabric of early second century Lezoux. A minimum of twenty bowls of form 37 are present, in standard Lezoux fabric, though over half are represented by rim or base sherds only and several others give but a hint of their decoration. One vessel among the decorated forms is the uncommon goblet form Déchelette 64 (made by the Libertus/Butrio circle and some other Lezoux potters, in the first half of the second century), but a small base sherd only survives.

A minimum of four of the Central Gaulish vessels from this site are Hadrianic, 33 are Hadrianic/Antonine and 64 fully Antonine, including some from the latter part of the range.

The proportion of fully Antonine vessels to the earlier ones from Central Gaul is about 1.4:1, at Stantonbury compared to 2.5:1 at Wood Corner MK64, 2.6:1 at Bancroft Villa MK105, 2.5:1 at MK297 Woughton MK297 and 2.5:1 at Milton Keynes as a whole.

The proportion of cups to dishes and dish-bowls from this source, in the second century as a whole, is about 1.5:2 at Stantonbury, 1:6 at Wood Corner, 1:2.5 at Bancroft and 1:2 at Woughton. Overall, the proportions of the one to the other are 1:2.3.

Samian used for dating specific contexts at Stantonbury

1975

71. Small sherd of samian. C.G. Probably Hadrianic/Antonine. *F1 (12).* Fill of hearth Building 1. RMK 1987, Fig. 34.

72. Decorated sherd. Possibly Rheinzabern ware. Shows Vulcan with tongs (O.69). Antonine. *F2 (8).* Interior of Building 1.

74. Two small sherds. Probably C.G. and mid second century. Fill of F97 (ditch)

1981

96. Sherd of a C.G. dish. Walters 79/Ludowici Tg range. Late Antonine. Slightly burnt. *301/4.* Destruction rubble over bath suite.

108. Small sherd. C.G. Probably Hadrianic or Antonine. *301/46.* Fill of Post hole in Yard. *RMK* 1987, Fig. 34.

111. Form 31 sherd. C.G. Antonine. *301/61.* Amorphous feature south of Building 2.

112. Two sherds. C.G. Probably Antonine. *301/61.* Amorphous feature south of Building 2.

113. Form 33 sherd. C.G. Antonine. *301/64.* Pier base, Building 2, Room 5.

117. Form 33 sherd. C.G. Second century. *301/72.* Pit below yard south of Building 2. RMK 1987, Fig. 34.

127. Small sherd. C.G. Early to mid second century. *301/80.* Footings of walls of Room 4 Building 2.

128. Sherd. C.G. Antonine. *301/80.* Footings of walls of Room 4 Building 2.

131. Dish sherd. S.G. Probably Flavian (or earlier?) *301/84.* Primary silt of ditch 84. RMK 1987, Fig. 34.

132. Form Curle 15 or 23 sherd. C.G. Hadrianic or Antonine. *301/84.* Upper fill of ditch 84.

133. Form 33 sherd. C.G. Antonine. *301/84.* Upper fill of ditch 84.

134. Dish sherd. C.G. Antonine. *301/84.* Upper fill of ditch 84.

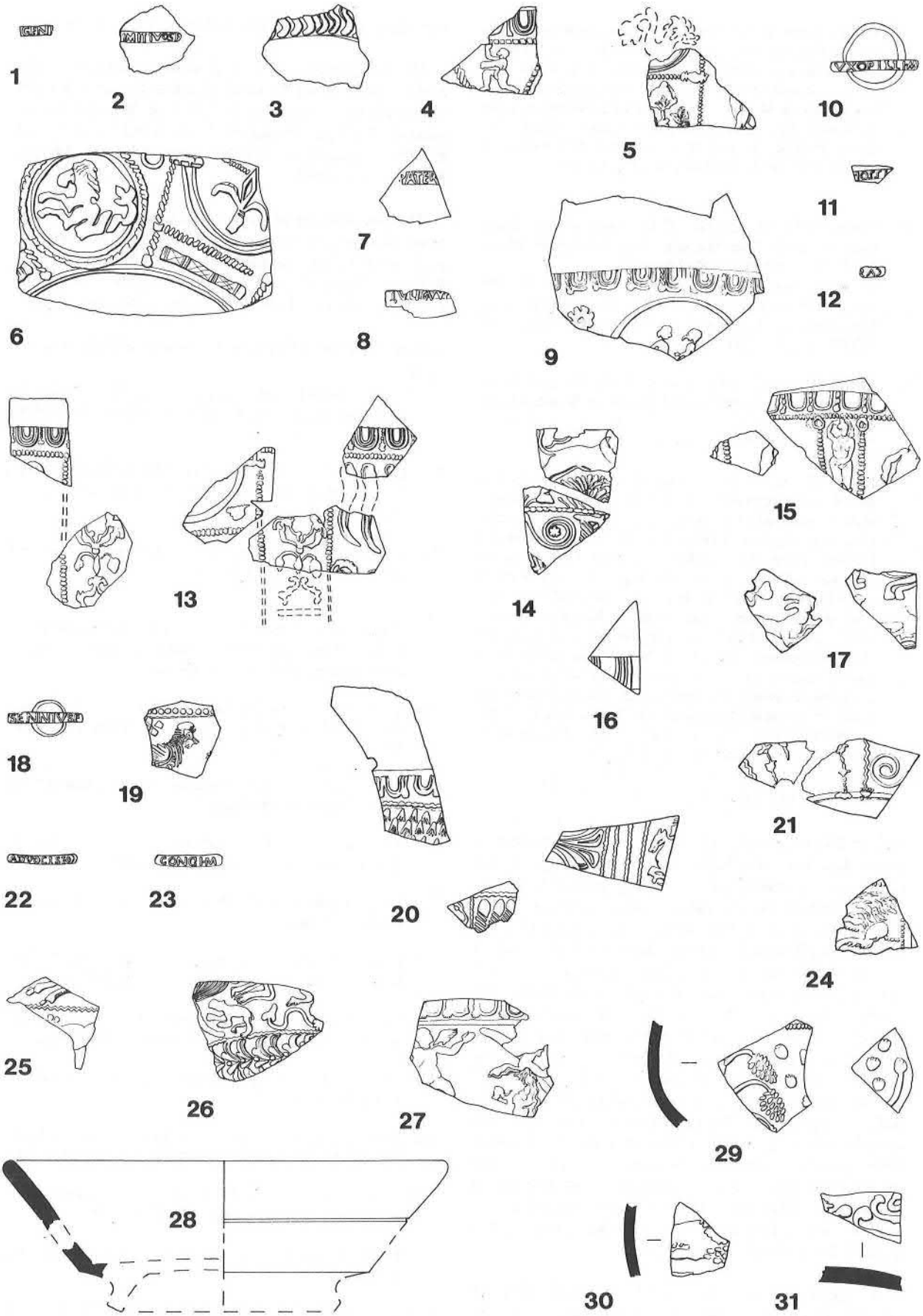

Figure 52: Gaulish Samian Ware, nos. 1–28, Samian Ware of Uncertain Continental Origin, nos. 29–31, (Scale 1:4).

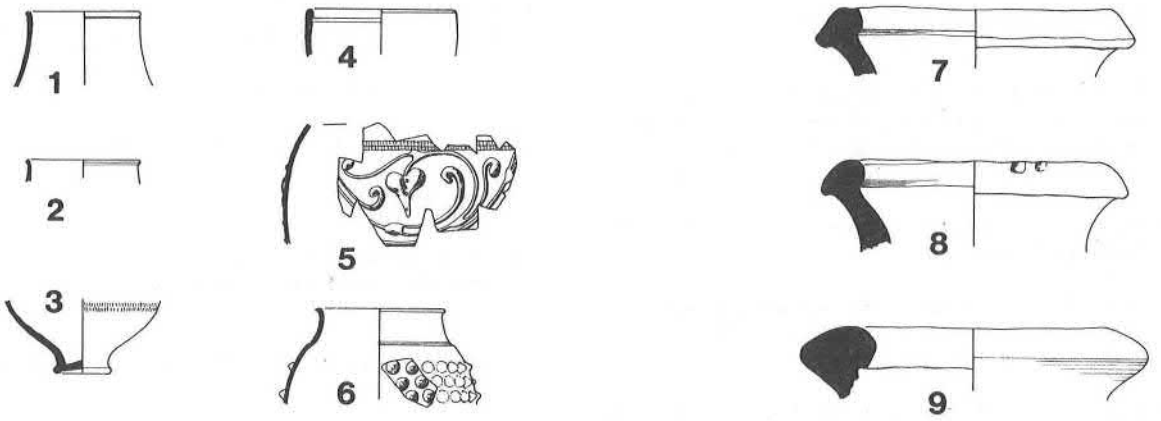

Figure 53: Rhenish Ware, Fabric 7, nos. 1–6, Spanish Amphorae, Fabric 22, nos. 7–9, (Scale 1:4).

135. Sherd. C.G. Probably Antonine. *301/84*. Upper fill of ditch 84.

1982

156. Form 37 sherd. C.G. Dog (probably O.1940). Careful work, possibly Albucius. c. 150–180 AD. *301/92*. Destruction wall 94.

157. Form 37 sherd. E.G. Only Ricken and Fischer 1963, E17, attested for Helenus of Rheinzabern, seems to fit the surviving ovolo fragment; if correct, early third century in date. *301/92. Destruction wall 94.*

166. Sherd, C.G. Second century. *301/110 Ditch 97.* RMK 1987 Fig 34.

167. Form 33 sherd. Burnt. The exterior wall grooving suggests E.G. origin. Antonine. *301/110 Ditch 97.* RMK 1987, Fig 34.

168. Form 33 sherd. Hadrianic or Antonine. *301/111 Ditch 97*

169. Sherd of a cup. Probably Antonine, *301/111 Ditch 97*

170. Sherd (form 36 etc.) C.G. Probably Hadrianic/Antonine. *301/111 Ditch 97*

195. Sherd. C.G. Possibly Walters form 79 etc. Mid to late Antonine. *301/145 Ditch 97*

177. Form 31 sherd. C.G. Antonine. *301/119* Destruction rubble, Buildings 3/4.

178. Sherd. Probably C.G. Antonine. *301/120.* Destruction, Building 4.

179. Form 33 sherd. C.G. Second century. *301/120.* Destruction Building 4.

185. Form 30 sherd. C.G. Small flat bead-rows, reminiscent of Advocisus of Lezoux. Probably mid to late Antonine. *301/130*. RMK 1987, Fig 34, 122. Destruction, Building 3.

186. Sherd. C.G. Antonine. *301/130*. RMK 1987, Fig 34, 122. Destruction, Building 3.

193. Form Curle 11 sherd in pre-main-export Lezoux fabric. Early second century. *301/143*. Fill of feature in yard, south of W122.

194. Form 18/31 or 31 sherd. C.G. Hadrianic or early Antonine. *301/143*. Fill of feature in yard, south of W122.

Other samian

199. Form 37, C.G. Three sherds, one decorated, of bowl with blurred, rosette-tongued ovolo, fine bead-row, a cupid (O.401 type, with left hand intact) and a Victory (O.826). The bead-row and the Victory were used by X-13 for the Donnaucus group (cf. Stanfield and Simpson 1958, pl. 45, Nos 518 and 519), and by Drusus of Lezoux, cf. Dickinson 1984, D.10 which also has this same cupid and, perhaps, the same ovolo. It is not entirely clear whether the fabric of this bowl belongs to Les Martres-de-Veyre, or Lezoux. Late-Trajanic or Hadrianic. *301 (148).* (Fig. 52, 27).

Loughton Valley MK307

Samian from Group 4: F1 C (1)
One sherd of C.G. samian. Hadrianic or early Antonine.

Simpson Sewage Works MK309

One sherd of form 45. C.G. c. 170–200 AD. *309/T6.*

Saxon Street MK313

Sherds from Group 7: 313/3 (1)
4. Form 38 sherd. C.G. Antonine.

5. Large dish sherd (Walters 79R etc.) C.G. Late Antonine.

Black coated ware

3. Form 33, C.G., a body sherd with a dull, black heavily chipped colour-coat. A rim sherd from the same vessel came from the topsoil.

This vessel (Fig. 52, 28) is unusual for plain ware, in having a black coated surface rather than the more normal red kind. The vessel is a variant of a Dr.33/33a cup; it has the external mid-point groove of the Dr.33 whilst exhibiting internal grooving at the junction of the wall and base and external grooving at the junction of the wall and footring. The fabric is closer to samian (Fabric 20) per se, rather than that of the 'Rhenish ware' (Fabric 7).

Samian from Ditch 6: RMK 1987, 47
8. Five sherds of a form 18 from Les Martres-de-Veyre. Trajanic. *313/6 (2)*

9. Form 18 or 18/31 sherd. Probably from Les Martres and Trajanic – to early Hadrianic. *313/6 (2)*

6. From 31 sherd. C.G. Probably mid to late Antonine. *313/6 (0)*

7. Two eroded sherds from the same vessel, form indeterminate. C.G. Antonine. Two other sherds of samian. C.G. Second century. *313/6 (0)*

Constantine Way MK345

Samian from Group 3

Here were six S.G. sherds, one of form 30 with trident-tongued ovolo, c. 85–105 AD, the others of more or less contemporary forms 18 (sherds of three dishes) and 18R (1 dish). There was also one rim sherd of form 18/31 or 31. C.G. Hadrianic-Antonine.

Hodge Lea MK346

One sherd of C.G. samian, form 37 (or 30),

footring, probably mid to late Antonine, and a form 27 sherd, probably from Les Martres-de-Veyre. Trajanic.

Caldecotte Lake (South) MK354

One C.G. sherd. Second century. *Residual in Group 16.*

Caldecotte MK44 (F92) Group 5

Decorated ware

10. Form 37. C.G. Three abraded sherds of a scroll-bowl in the style of the Cinnamus group of Lezoux: ovolo 3A (Simpson and Rogers 1969, Fig. 1), bird (O.22398), leaf (Stanfield and Simpson 1958, Fig. 47, No. 38.). For similar work, cf. *ibid.* pl. 162. c. 150–180 AD. *F92/C (1).*

Samian counters

Four dish sherds, three from the same one, fashioned, in antiquity, for use as counters. Diameters range from 16–23mm. C.G. Hadrianic/Antonine. *F92/A (1), B (1) and C 3(+)*

Other samian from Group 5

A small amount of C.G. plainware as follows:

1. Form 18/31 or 31 rim sherd. Antonine. *F92/A (1).*

4. Form 31 sherd. Antonine, *F92/A (2).*

5. Form 36. sherd. Antonine *F92/A (2).*

7. Sherd of large, flat dish; fabric slightly overfired. Hadrianic/Antonine. *F92/B (3)*

8. Sherd. Probably Hadrianic/Antonine. *F92/B (3).*

9. Sherd. Hadrianic/Antonine. *F92/C (1)*

Caldecotte MK357 (Features related to Kiln II)

Three C.G. vessels, Hadrianic or Hadrianic to early Antonine:

1. Two large sherds of form 18/31–31. (8) Layer in ditch 6 and (3) unstratified.

2. Large rim sherd of form 35/36. (8) Layer in ditch 6.

3. Three large sherds of a form 18/31R. Ditch (16) and (3) unstratified

The fabrics of these vessels are closely similar to one another. Nos 1 and 3 appear very slightly burnt.

Fig 52

These illustrated pieces are described in Hedley Pengelley's report, above. Given below are the relevant page numbers on which information for each sherd can be found, followed by the archive number under which the sherd is listed on that page.

1	p. 148,	57	15	p. 151,	59
2	p. 148,	66	16	p. 151,	87
3	p. 148,	44	17	p. 151,	61
4	p. 148,	38	18	p. 151,	92
5	p. 148,	48	19	p. 152,	1
6	p. 148,	64	20	p. 152,	25
7	p. 149,	15	21	p. 152,	26
8	p. 149,	23	22	p. 152,	100
9	p. 149,	3	23	p. 152,	39
10	p. 149,	71	24	p. 152,	67
11	p. 150,	122	25	p. 152,	51
12	p. 150,	123	26	p. 152,	135
13	p. 150,	91	27	p. 156,	199
14	p. 151,	58	28	p. 156,	3

TABLE 7: Incidence of the main wares in Pie Chart 18A

Site	Max No. Sherds	S.G.%	No. Sherds	C.G.%	No. Sherds	E.G.%	No Sherds
MK25	6	0.0	–	100.0	6	0.0	–
MK44	14	0.0	–	100.0	14	0.0	–
MK45	40	0.0	–	100.0	40	0.0	–
MK64	92	1.1	1	83.7	77	15.2	14
MK96	6	0.0	–	100.0	6	0.0	–
MK100	38	2.6	1	34.2	13	63.2	24
MK105	360	4.2	15	94.4	340	1.4	5
MK109	13	0.0	–	100.0	13	0.0	–
MK211	9	0.0	–	67.0	6	33.0	3
MK269	15	0.0	–	87.0	13	13.0	2
MK297	182	8.2	15	91.3	166	0.5	1
MK301	268	1.1	3	95.1	255	3.8	10
MK307	1	0.0	–	100.0	1	0.0	–
MK309	1	0.0	–	100.0	1	0.0	–
MK313	26	0.0	–	100.0	26	0.0	–
MK345	6	83.3	5	16.7	1	0.0	–
MK346	2	0.0	–	100.0	2	0.0	–
MK354	1	0.0	–	100.0	1	0.0	–
MK357	6	0.0	–	100.0	6	0.0	–
	1086		40		987		59

TABLE 8: Incidence of the main wares in Pie Chart 18B

Site	Min No. Vessels	S.G.%	No. Vessels	C.G.%	No. Vessels	E.G.%	No Vessels
MK25	4	0.0	-	100.0	4	0.0	-
MK44	4	0.0	-	100.0	4	0.0	-
MK45	19	0.0	-	100.0	19	0.0	-
MK64	51	2.0	1	86.2	44	11.8	6
MK96	3	0.0	-	100.0	3	0.0	-
MK100	23	4.3	1	60.9	14	34.8	8
MK105	131	9.9	13	88.6	116	1.5	2
MK109	6	0.0	-	100.0	6	0.0	-
MK211	6	0.0	-	67.0	6	33.0	3
MK269	6	0.0	-	83.3	5	16.7	1
MK297	101	9.0	9	90.1	91	0.9	1
MK301	118	1.7	2	93.2	110	5.1	6
MK307	1	0.0	-	100.0	1	0.0	-
MK309	1	0.0	-	100.0	1	0.0	-
MK313	11	0.0	-	100.0	11	0.0	-
MK345	6	83.3	5	16.7	1	0.0	-
MK346	2	0.0	-	100.0	2	0.0	-
MK354	1	0.0	-	100.0	1	0.0	-
MK357	3	0.0	-	100.0	3	0.0	-
	497		31		441		25

TABLE 9:Incidence of the main wares from individual potteries

Pottery	Area	Stamped plain ware	Decorated ware	Unstamped plain ware
La Graufesenque	South Gaul		MK64,MK105, MK297,MK345	MK100,MK105, MK297,MK301, K345
Les Martres-de-Veyre	Central Gaul		MK297	MK96(?), K301,MK313
Lezoux	Central Gaul	MK45,MK64, MK105,MK269, MK297	MK25,MK45, MK64,MK100, MK105,MK297, MK301,MK346, MK44,	MK25,MK45, MK64,MK96, MK100,MK105, MK109,MK211, MK269,MK267 MK301,MK307, MK309,MK313, MK345,MK346 MK54,MK44, MK357
Lezoux (Pre Main Export)	Central Gaul			MK301
Lezoux, Ligonne	Central Gaul			MK297 (?)
Vichy? (Terre Franche)	Central Gaul		MK105	
Rheinzabern	East Gaul	MK64,MK100	MK64,MK100, MK105	MK64,MK100, MK211, MK269 (?), MK297 (?), MK301
(?)	East Gaul			MK64,MK100, MK105,MK301

TABLE 10: Chronological distribution of the attributed potters' stamps

Date	Potter	Pottery	Die	Distribution
145–165	Congius	Lezoux	2b	MK297
140–170	Mattius	Lezoux	4a	MK45
150–170	Genialis iv	Lezoux	6c	MK64
	Uxopillus	Lezoux	4a	MK105
150–180	Cuccillus i	Lezoux	6a	MK45
	Senniius	Lezoux	1a	MK297
155–180	Mossius ii	Lezoux	2b	MK105
160–190	Advocisus	Lezoux	1a	MK297
	Advocisus	Lezoux	–	MK105
160–200	Sextus v ?	Lezoux ?	–	MK269
Mid to Late Antonine	Casurius ii?	Central Gaul	–	MK105
Late 2nd or early 3rd Cent.	Iulianus iii	Rheinzabern	–	MK100
	Paternianus ii	Rheinzabern	1a	MK100
180–260	Primitius/ Primitivus	Rheinzabern	3b	MK64

TABLE 11: Chronological distribution of decorated Samian from Lezoux

Date	Potter	Distribution
125–145	Austrus or Rogers's Secundinus I	MK301
	Butrio	MK297
	Sacer/Attianus, Ovolo, Rogers B16	MK105
135–165	Criciro or Divixtus	MK64
	Ovolo, Rogers B12	MK301
140–165	Divixtus	MK297
145–175	Cinnamus, Ovolo 3A or 3B	MK100
150–180	Cinnamus, Ovolo 1	MK297
	Cinnamus Ovolo 3A	MK44
	Cinnamus style	MK297 ×2
	Albucius ?	MK301
160–190	Censorinus	MK64
	Paternus II or Iustus	MK64
	Paternus II ?	MK297
165–200	Doeccus	MK64

TABLE 12: Summary of Samian forms: South Gaul

Date / Group	Form	40-55	65-75	70-85	75-85	75-90	75-95	Fla	Fla or Fla-Traj	85-105	85-110	Fla-Traj	1st Cent	Late 1st Cent.	Late 1st+ Cent.	Totals
A	29	1	1	1	1											4
	30							1		1						2
	37			1		2	1				1					5
	Déch 67							1								1
D	27							1	1			1				3
E	15/17 or 17/17R							1					1			2
	18							6	2					1	1	10
	18 or 18/31											2				2
	18R							1								1
F	Curle 11							1								1
	Totals	1	1	2	1	2	1	12	3	1	1	3	1	1	1	31

TABLE 13: Summary of samian forms: Central Gaul (Decorated Ware)

Date / Group	Form	100-120	Late Traj or Had	Traj-Had	125-145	Had-Ant	Had or Ant	135-165	140-165	145-175	150-180	160-190	Ant	Mid to late Ant	Late Ant	165-200	2nd Cent	First half of 2nd cent	Totals
					0			0	0	0	0	0				0			
A	30										1		1		1				3
	30 or 37						1							1					2
	37	1a	1		3	8	2	2	1	1b	4	3	14	3		1	2	1	48
	Déch 64			1															4
C	Déch 72												4						4
	Totals	1	1	1	3	8	3	2	1	1	5	3	19	4	1	1	2	1	58

a = from Les Martres-de-Veyre
b = from Vichy (Terre Franche)?
O (for potters and distribution see Table 11)

TABLE 14: Summary of Samian forms: Central Gaul (plainware)

Group	Form	Traj	Traj-Had	Had	Had or early Ant	Had-Ant	Had or Ant	Early Ant	145-165	140-170	150-170	150-180	155-180	160-190	160-200	Ant	Mid to late Ant	2nd Cent	Early to mid 2nd cent	Second half of 2nd cent	Late 2nd cent	Totals
D	27			1	2											3			2			8
	33			1	3	5	9			1+		1+	1+			55	4	4				84
	33(black coated)																1					1
	33 or 33a				2x		1	2										1				6
	33† or 46						1															1
	35/36						1															1
	46															2						2
E	15/31 or 15/31R																				1	1
	18	2b																				2
	18 or 18/31		1a																			1
	18/31				1	6						1+										8
	18/31-31			4a		4										2			1			11
	18/31 or 31		1a		3	7	4									6						21
	18/31R			2	1	9										1						13
	18/31R-31R					4										2						6
	18/31R or 31R					2	3									6						11
	31				1c	2		3	1+		1+			1+		54	16				2	81
	31R													1+	1+	28	12x			1	5	48
	36				1	2	12									3	2					20
	42																		2			2
E	Curle 15															1						1
	Curle 15 or 23					1	1										1					3
	Curle 23															1					1	2
	Walt 79																2					2
	Walt 79 or 79R																1					1
	Walt 79 or Lud Tg																				3	3
	Lud Tg																1					1
F	38					2					1+					11	2					16
	38 or 44															3						3
	Curle 11																		2d			2
	Curle 21																			1		1
G	45																				6	6
	45 or 43																				2	2
H	Jar/Flagon															4		2		4		10
	Totals	2	2	8	14	44	32	5	1	1	2	2	1	2	1	182	42	7	7	6	20	381

+ = with potter's stamp; x = one with potter's stamp (for potters and distribution see Table 10).
a = one from Les Martres-de-Veyre; b = two from Les Martres-de-Veyre; c = probably from Lezoux, Ligonne; d = one in pre- main export Lezoux fabric.

TABLE 15: Summary of samian forms: East Gaul

Date Group	Form	Had or early Ant	Ant	Second half of 2nd cent	160-180	160-200	Late 2nd cent	180-220	Late 2nd or early 3rd cent	180-260	Late 2nd or 3rd cent	Early 3rd cent	Totals
A	37		1a		1a	1a		1a				1a	5
B	Bulbousjar/beaker								1a				1
D	27	1											1
	33		1										1
E	31 (Sa)								2a	1+a			3
	31R		1						1				2
	32?								1+a				1
	36								1+a				1
	Lud Tb?			1a									1
F	38		2b				2		1b				5
	38 or Curle 11		1										1
G	45										1		1
H	Jar/Flagon						1		1				2
	Totals	1	6	1	1	1	3	1	8	1	1	1	25

+ = with potter's stamp (for potters and distribution see Table 10)
a = from Rheinzabern; b = from Rheinzabern?

TABLE 16: Summary of Samian forms from each site: South Gaul

Site Group	Form	MK25	MK45	MK64	MK96	MK100	MK105	MK109	MK211	MK297	MK301	MK307	MK309	MK313	MK345	MK354	MK44	MK357	Totals
A	29						3			1									4
30	30						1								1				2
37			1			1			3									5	
	Déch						1												1
D	27						1			1	1								3
E	15/17 or 15/17 R						2												2
	18						4			2	1				3				10
	18 or 18/31					1				1									2
	18R														1				1
F	Curle 11									1									1
	Totals			1		1	13			9	2				5				31

TABLE 17: Summary of Samian forms from each site: Central Gaul (Decorated Wares).

Site Group	Form	MK25	MK45	MK64	MK96	MK100	MK105	MK109	MK211	MK297	MK301	MK307	MK309	MK313	MK345	MK354	MK44	M357	Totals
A	30			1						1	1								3
	30 or 37										1				1				2
	37	1	1	8		1	9b			7a	20						1		48
	Déch 64										1								1
C	Déch 72					1	2			1									4
	Totals	1	1	9	2	11	9	23					1		1		58		

a = one from Les Martres-de-Veyre; b = one from Vichy? (Terre France).

TABLE 18: Summary of Samian forms from each site: Central Gaul (plainware)

Site Group	Form	MK25	MK45	MK64	MK96	MK100	MK105	MK109	MK211	MK269	MK297	MK301	MK307	MK309	MK313	MK345	MK346	MK354	MK44	MK357	Totals
D							3				2	2					1a				8
	33	2	7	3	1		23	1	3		18	25			1					84	
	33 (black coated)														1					1	
	33 or 33a						1				3	2								6	
	33 or 46										1										1
	35/36																			1	1
	46			1								1									2
E	15/31 or 15/31R										1										1
	18			1											1a						2
	18 or 18/31														1a						1
	18/31		2			1	1				1	3									8
	18/31-31			4			2			1		3b								1	11
	18/31 or 31			3			6		1		5	4				1			1	21	
	18/31R		4	2			4					2								1	13
	18/31R-31R		1				2				1	2									6
	18/31R or 31R		1	1		2	4				1	2									11
	31	1		8		2	18	4	1	1	31c	11			3				1		81
	31R			3		1	25	1		3	3	9			3						48
	36			4	1	1	3				5	5							1		20
	42						1					1									2
	Curle 15						1														1
	Curle 15 or 23					1	1					1									3
	Curle 23				1		1														2
	Walt 79		2																		2
	Walt 79 or 79R			1																	1
	Walt 79 or Lud	Tg				1						2									3
	Lud Tg			1																	1
F	38		1	1			7				4	2			1						16
	38 or 44					1						2									3
	Curle 11											2d									2
	Curle 21											1									1
G	45			2		1	2							1							6
	45 or 43					1					1										2
H	Jar/flagon										5	5									10
	Totals	3	18	35	3	12	105	6	5	5	82	87			1	11	1	1	3	3	381

a = from Les Martres-de-Veyre; b = one from Les Martres-de-Veyre; c = one probably from Lezoux, Ligonne; d = one in second century pre- main export Lezoux fabric.

TABLE 19: Summary of Samian forms from each site: East Gaul

Site		MK25	MK45	MK64	MK96	MK100	MK105	MK109	MK211	MK269	MK297	MK301	MK307	MK309	MK313	MK345	MK346	MK354	MK44	MK357	Totals
Group	Form																				
A	37			2a		1a	1a					1a									5
B	Bulbous jar/beaker					1a															1
D	27					1c															1
	33											1c									1
E	31 (Sa)			1a		1a						1a									3
	31R					1c						1c								2	
	32					1a															1
	36					1a															1
	Lud Tb								1a												1
F	38			1b		1b	1c			1b	1b										5
	38 or Curle 11											1c									1
G	45			1c																	1
H	Jar/flagon			1c								1c									2
	Totals			6		8	2		1	1	1	6								25	

a = from Rheinzabern; b = from Rheinzabern?; c = ? Uncertain source

vii Samian Ware of Uncertain Continental Origin
Fig. 52
Fabric 21

As noted above (page 150) the samian from Little Woolstone MK109 includes some moulded sherds of uncertain design. These sherds will be fully published in due course, but it is desirable that a preliminary note on them be included here. The four sherds are in a coarse orange coloured fabric with soil eroded surfaces. Two of them appear to belong to the same vessel, possibly a very small Dr 37 showing a fine wavy line above blobs, a curvilinear motif and a grape vine (No 29).

A third curving sherd (No 30) shows an animal type (Lion?) running to left, but this device seems not to fit the visual concept of the previous sherds.

The fourth sherd (No 31) appears to be part of a horizontal handle (form DR 39?) showing a little vegetation and curvilinear motifs.

The part-abstract decoration is unusual and might suggest an origin at one of the Spanish production areas such as Rioja; cf. the combined use of blobs, curvilinear motifs, bunches of grapes, etc. on form Dr 39 handles from the Tritium Magallum kilns there (Mayet 1983–4, pl. LXXI, Nos 181–190). Form 39 was a common product of the Spanish sigillata industry, and very small Dr 37s – with rim diameters of 100–112mm – were also common there (inf. in litt. Dr. Adilia Moutinho Alarccao of Conimbriga Museum, Portugal).

One of the sherds (No 30) was submitted for thin section analysis to M. Picon of the Laboratoire de Céramologie, Lyon. M. Picon sent a detailed report stating that the fabric was not a product of any of the known Spanish samian kilns. In particular he considered that the fabric did not belong to Rioja. He suggested that it was more reminiscent of the products of Eastern Gaul, possibly Argonne. However, the decoration is not so far as can be ascertained paralleled at any of the known East Gaulish Kilns.

Fig. 52, 29–31

All are from MK109/44 Ditch 12. A recut feature extending in date from the first century to the third-quarter of the second.

viii Spanish Amphorae

Fabric 22 Fig. 53, page 155.

Seventeen sherds of amphorae were sent for identification to Dr David Williams at the University of Southampton. Of this number, two were unassigned and the remainder were recognised as type Dressel 20. Those sherds *not* sent to Dr Williams have been compared to the positively identified material and found to be identical; it therefore appears that apart from the two unassigned sherds, all amphorae coming into this area were Dressel 20's.

Dressel 20 amphorae came from the Guadalquivir region of Spain, between Seville and Cordoba, where they were used principally for the transportation of olive-oil. This type of amphora has a wide date-range from the pre-Roman Period 1 levels at Camulodunum (10–43 AD) to the third/fourth centuries AD. In Britain the floruit of Dressel 20 importation was during the second century AD (Dr David Williams, pers. comm.).

To date approximately fifty-four Dressel 20 sherds have been recovered from all the sites within Milton Keynes. This represents perhaps a minimum of twelve vessels (one vessel per site that produced a sherd) or a maximum of thirty-four vessels (one vessel per feature that produced a sherd). In contrast, at the Park Street excavation (Lambrick 1980) in the town of Lactodorum (Towcester) some twelve to thirteen kilometres north of Milton Keynes the quantity of vessels represented was considerably greater, especially when it is considered that these figures were produced from *one site only* – a possible twenty-five vessels dating to the early to mid second century with a further nine in the later residual phase. The vessel types were also more varied and included Dressel form 30, from Southern Gaul and Camulodunum form 186 from Cadiz in Southern Spain (Symonds 1980, 79).

The olive-oil contained in the Dressel 20 amphorae is believed to have been used for lamp-fuel rather than for cooking. The relative scarcity of the amphorae, combined with a total lack of lamps in Milton Keynes, suggests that local people were burning an alternative fuel. It is not difficult to believe that the olive-oil must have been extremely expensive and this factor, combined with the difficulty of transporting amphorae overland to rural farmsteads, probably kept it largely within the towns.

Caldecotte, for a rural excavation, produced a fair quantity of amphorae sherds most of which were presumably dumped as rubbish from the closely neighbouring town of Magiovinium. The majority of the pieces are from features which date largely to the second century. At Wymbush one of the two amphorae sherds recovered from the site came from beneath the floor levels of the house, believed to have been constructed in the late second century, whilst the other sherd is presumed residual in Group 13. Group 10, dated late second to mid third century also produced a Dressel 20 body sherd.

The most interesting amphora sherd came from the topsoil at Bancroft villa. It appears to be an early rim form (Fig 53, 7) and as such can be placed near the beginning of the series. Its presence at the villa suggests that there may have been a wealthy family or community on the site prior to the Roman invasion. With the exception of this sherd, however, and a number of possible residual pieces a good proportion of the Dressel 20 amphorae sherds within Milton Keynes do appear to be second century in date and in the main do agree with the suggested floruit.

A list of Amphorae sherds found in Milton Keynes is given on Table 20.

Fig 53, 7–9

7. MK105 (261) rubble. Early rim form.

8. MK105 (313) rubble.

9. MK301 F112, predominantly second Cent. context.

Table 20. Dressel 20 Amphora Sherds found within Milton Keynes

Site and FeatureNo		Description	Date	No of sherds
MK105	261	Rubble	1st-4th	2
MK105	313	Surface cleaning	1st-4th	1
MK313	14	Pit	Early-mid 2nd	1
MK313	+	Topsoil	Early-mid 2nd	1
MK297	H/100	Topsoil	1st-4th	1
MK297	43	Gully/ditch	Early-late 2nd	1
MK297	33	Gully	2nd	1
MK297	32	Gully	Mid-late 2nd	1
MK304	+	Topsoil	Largely late 2nd-early 3rd	1
MK211	57/58	Ditch	Early-mid 4th	1
MK211	37	Floor under Bldg 1	Mid-late 2nd	1
MK45	T9	Ditch	Largely mid-late 2nd	1
MK269	-	Ditch	Late 2nd-mid 3rd	1
MK64	+	Topsoil	2nd-4th	2
MK250	–		SFB 465 Largely 4th	1
MK109	62	Ditch	Late 2nd-4th	1
MK301	SI F112	Layer	Largely 2nd	1
MK301	39	Rubble	1st-4th	7
MK44	6	Layer	1st-4th	1
MK44	F10	Ditch	Mid 1st-early 2nd	1
MK44	F19C1	Gully	Late 2nd	1
MK44	F89E1	Ditch	Largely 2nd	1
MK44	100	Layer	1st-4th	1
MK44	F108E1	Ditch	Late 1st-mid 2nd	1
MK44	F114A1	Ditch	2nd	1
MK44	124	Layer	Largely 2nd	2
MK44	141	Layer	1st-4th	5
MK44	176	Layer	Largely 2nd	3
MK44	F186	Ditch	Largely 2nd	6
MK44	F187	?Depression	Largely late 2nd	
MK44	F197	Pit or depression	Late 2nd-mid 3rd	1
MK44	F221	Pit	1st-4th	1
MK44	42	Ditch (79M18)	1st-4th	1
MK44	264	Ditch (79M18)	Late 1st-Late 2nd	1

BIBLIOGRAPHY

Allen, D.F., 1976. 'Wealth, money and coinage in a Celtic Society. *in* J.V.S. Megaw (ed) *To illustrate the monuments: essays on archaeology presented to Stuart Piggott*' 199–08.

Anderson, A.C., 1980. *A Guide to Roman Fine Wares*, Vorda Research Series.

Anderson, A.C. and Anderson, A.S. (eds), 1981. *Roman Pottery Research in Britain and north-west Europe*, Brit. Archaeol. Rep. Internat. Ser. 123 (Oxford).

Arthur, P., 1978. 'The lead glazed wares of Roman Britain' *in* P. Arthur and G. Marsh (Eds), 1978, 293–356.

Arthur, P. and Marsh, G, (eds) 1978. *Early Fine Wares in Roman Britain,* Brit. Archaeol. Rep. 57 (Oxford).

Anon. 1959. *in* 'Roman Britain in 1958'. *J. Roman Stud.* 49, 102–39.

Bird, J. and Marsh, G., 1978. 'Decorated samian' in *Southwark Excavations I*, Joint publication I, London and Middx. Arch. Soc. and Surrey Arch. Soc., 96–102.

Bradley, R., 1971. 'Trade competition and artefact distribution', *World Arch.* 2, 347–52.

Brassington, M., 1970. 'First century Roman occupation at Strutt's Park, Derby', *Derbys. Arch. Journ.* XC, 22–80.

Brodribb, A.C.C., Hands, A.R. and Walker, D.R., 1971. *'Excavations at Shakenoak Farm, near Wilcote, Oxfordshire' Vol.* I (privately published).

Brown, A.E., 1972. 'Roman pottery kilns at Harrold, Beds'. *Milton Keynes Journal of Arch. & Hist.* 1, 7–9.

Brown, A.E. and Alexander, J.A., 1982. 'Excavations at Towcester 1954: The Grammar School Site'. *Northamptonshire Archaeol.* 17, 24–59.

Brown, A.E. and Sheldon, H.L., 1974. 'Highgate Wood: The Pottery and its Production'. *London Archaeologist* 2, 222–31.

Brown, A.E. and Woodfield, C., 1983. 'Excavations at Towcester, Northamptonshire: The Alchester Road Suburb'. *Northamptonshire Archaeol.* 18, 43–140.

Bunch, B. and Corder, P., 1954. 'A Romano-British pottery kiln at Weston Favell, near Northampton'. *Antiq. J.* 34, 218–24.

Bushe-Fox, J.P., 1949. *Fourth Report on the Excavations of the Roman Fort at Richborough, Kent.* Report of the Research Committee of the Society of Antiquaries of London, 16 (Oxford).

Callender, M.H., 1965. *Roman Amphorae*, Oxford.

Casey, P.J. (ed), 1979. 'The End of Roman Britain'. *Brit. Archaeol. Rep.* 71 (Oxford).

Castle, S.A., 1972. 'A kiln of the potter Doinus'. *Archaeol. J.* 129, 69-88.

Castle, S.A., 1974.'Excavations at Brockley Hill, Middlesex 1972'. *Trans. London Middlesex Archaeol. Soc.* 25, 251–63.

Castle, S.A., 1976a. 'Roman Pottery from Radlett, 1959'. *Hertfordshire Archaeol.* IV (1974–76), 149-152.

Castle, S.A., 1976b. 'Roman Pottery from Brockley Hill, Middlesex, 1966 and 1972–74'. *Trans. London Middlesex Archaeol. Soc.* 27, 206–227.

Corder, P., 1943. 'The Roman pottery at Fulmer'. *Recs. Bucks* 14.3, 153–163.

Cottrill, F., 1937. 'The Pottery, in K.P. Oakley, C.E. Vulliamy, E.C. Rouse and F.Cottrill, The Excavation of a Romano-British Pottery Kiln Site near Hedgerley. *Recs. Bucks.* 13, 272–280.

Cunliffe, B.W., 1969. *Roman Bath* (London)

Darling, M.J., 1977. *A group of late Roman pottery from Lincoln.* C.B.A. for Lincoln Archaeological Trust Monograph Series 16–1.

Detsicas, A. (Ed), 1973. *Current Research in Romano-British Coarse Pottery.* C.B.A. Res. Rep. 10 (London).

Dickinson, B.M., 1984. 'The Samian Ware' *in* Frere 1984, 175–197.

Dore, J. and Greene, K. (Eds), 1977. *Roman pottery studies in Britain and beyond.* Brit. Archaeol. Rep. Internat. Ser. 30 (Oxford).

Dyer, J.F., 1976. 'The Bedfordshire region in the first millenium B.C.' *Bedfordshire Archaeol. J.* 11, 7–22.

Farrar, R.A.H., 1973. The techniques and sources of the Romano- British black-burnished ware, *in* A. Detsicas, *1973*, 67–103.

Fiches, J.-L., 1978. 'Les Coupes Drag. 29 en Languedoc-Roussillon'. *Figlina* 3, 43–70.

Fiches, J.-L., Guy, M. and Poncin, L., 1978. 'Un Lot de Vases sigillés des premiéres années du Régne de Néron dans l'un des Ports de Narbonne'. *Archaeonautica ii*, 185–219.

Frere, S.S., 1962–3. Review of D.A. White's Litus Saxonicum: The British Saxon shore in Scholarship and History. *Medieval Archaeology* Vol. 6–7, 350–352.

Frere, S.S., 1967, *Britannia*, London.

Frere, S.S., 1972. *Verulamium Excavations I*, Report of the Research Committee of the Society of Antiquaries of London, 28 (Oxford).

Frere, S.S., 1984. *Verulamium Excavations III*, Oxford University Committee for Archaeology, Monograph No 1 (Oxford).

Friendship-Taylor, R.M., 1974. 'The Excavation of the Belgic and Romano-British Settlement at Quinton, Northants 1971–2'. *J. Northampton Mus. & Art Gallery*, 11, 3–59.

Friendship-Taylor, R.M., 1979. 'The excavations of the Belgic and Romano-British settlement at Quinton, Northamptonshire, site 'B', 1973–7'. *J. Northampton Mus. & Art Gallery* 13, 2–176.

Fulford, M.G., 1975. 'The Pottery', *in* B.W. Cunliffe *'Excavations at Portchester Castle, 1: Roman*, Report of the Research Committee of the Society of Antiquaries of London 32,270–366.

Geddes, S., 1977. *The late Roman pottery from the Verulamium Theatre.* M.A. Thesis, Univ. London.

Gillam, J.P., 1970. *Types of Roman Coarse Pottery Vessels in Northern Britain.* 3rd edition.

Gillam, J.P., 1976. 'Coarse fumed ware in north Britain and beyond'. *Glasgow Archaeol. J.* 4, 57–80.

Gillam, J.P., 1979. 'Romano-Saxon Pottery: An Alternative Interpretation' *in* Casey, P.J. (ed) 1979. 103–118.

Going, C.J., 1987. *The Mansio and other sites in the south-eastern sector of Cæsaromagus: the Roman pottery*. Chelmsford Archaeol. Trust Rep. 3.2; C.B.A. Research Rep. 62.

Gould, J. 1966. 'Excavations in advance of road construction at Shenstone and Wall (Staffordshire)'. *Lichfield South Staffs. Archaeol. Hist. Soc.* 6, 1–9.

Green, M.J., 1975. *The Bradwell Roman Villa: first interim report*, MKDC Occasional Papers in Archaeology 1. (Milton Keynes).

Green, C. and Draper, J., 1978. 'The Mileoak Roman Villa, Handley, Towcester, Northants: Report on the excavations of 1955 and 1956'. *Northamptonshire Archaeol.* 13, 28–66.

Greene, K., 1978a. 'Imported fine wares in Britain to A.D. 250; a guide to identification', *in* Arthur, P. and Marsh, G. 1978, 15–30.

Greene, K., 1978b. 'Mould-decorated Central Gaulish Glazed ware in Britain', in Arthur, P. and Marsh, G. 1978, 31–60.

Greene, K., 1979a. *Usk: The Pre-Flavian Fine Wares* (Cardiff).

Greene, K., 1979b, note in Friendship-Taylor 1979, 91.

Haalebos, J.K., 1979. 'Primus, Celadus und Senicio'. Rei Cretariae Romanæ Fautorum. *Acta* XIX/XX, 121–135.

Hall, D.N. and Nickerson, N., 1967. Excavations at Irchester 1962–3. *Archaeol. J.* 124, 65–99.

Harden, D. and Green, C., 1978. 'A late Roman Grave-Group from The Minories, Aldgate'. *Collectanea Londiniensia*, London Middlesex Arch. Soc. Spec. Pap. 2, 163–75.

Hartley, B.R. and Pengelly, H., 1976. 'Samian Ware' *in* Stead, I.M., 1976, 102–116.

Hartley, K.F., 1980. *in* Lambrick 1980, 77–79.

Hawkes, C.F.C. and Hull, M.R., 1947. *Camulodunum*, Report of the Research Committee of the Society of Antiquaries of London, 14 (Oxford).

Hermet, F., 1934. *La Graufesenque (Condatomago)* (Paris).

Horton, A., Shephard-Thorn, E.R. and Thurrell, R.G., 1974. *The Geology of the New Town of Milton Keynes. Institute of Geological Sciences*. Rep. 74/16 (London).

Howe, M.D., Perrin, J.R. and Mackreth, D.F., 1980. *Roman Pottery from the Nene Valley: A guide*. Peterborough City Museum Occ. Paper 2.

Hull, M.R., 1963. *The Roman potters' kilns of Colchester*. Report of the Research Committee of the Society of Antiquaries of London, 21 (Oxford).

Hunter, R. and Mynard, D.C., 1977. 'Excavations at Thorplands, nr Northampton'. *Northamptonshire Archaeol.* 12, 97–154.

Johnston, D.E., 1969. 'Romano-British Pottery Kilns near Northampton'. *Antiq. J.* 49, 75–97.

Johnston, D.E., 1974. 'The Roman settlement at Sandy, Bedfordshire'. *Bedfordshire Archaeol.* J. 9, 35–54.

Jones, M.U., 1958. 'Excavations at Stanton Low, in the Upper Ouse Valley during March 1957'. *Recs Bucks.* 16, 198–215.

Karnitsch, P., 1959. *Die Reliefsigillata von Ovilava* (Linz).

Kennett, D.H., 1971. 'Bedfordshire Archaeology 1970–71'. *Bedfordshire Archaeol. J.* 6, 81–88.

Knight, J.K., 1967. 'Excavations at the Roman town of Irchester 1962–3'. Archaeol. J. 124, 100–128.

Knorr, R., 1907. *Die verzierten Terra-Sigillata-Gefässe von Rottweil* (Stuttgart).

Knorr, R., 1919. *Töpfer und Fabriken verzierter Terra-Sigillata des ersten Jahrhunderts (Stuttgart).*

Knorr, R., 1952. Terra-Sigillata-Gefässe des ersten Jahrhunderts mit Töpfernamen (Stuttgart).

Lambrick, G., 1980. 'Excavations in Park Street, Towcester.' *Northamptonshire Archaeol.* 15, 35–118.

Lyne, M.A.B. and Jefferies, R.S., 1979. *The Alice Holt/Farnham Roman Pottery Industry*. C.B.A. Research Report 30.

Marsh, G.D., 1978. 'Early second century fine wares in the London area', *in* Arthur, P . and Marsh, G. 119-224.

Marx, K., 1918. *Capital, A Critique of Political Economy I*. Kerr edn, trans. of 3rd German edn (Chicago).

Mayet, F., 1983–4. *Les Céramiques sigillées hispaniques. Contribution a L'histoire économique de la Péninsule Ibérique sous l'Empire Romain*. 2 Vols. Publiction du Centre Pierre Paris (E.R.A. 522), 12 (Paris).

Mynard, D.C., 1970. 'Appendix: Local Roman Finds' *Wolverton Historical Journal*, Wolv. and Dist. Arch. Soc., 59-62.

Mynard, D.C. and Woodfield, C., 1977. 'A Roman site at Walton, Milton Keynes'. *Recs. Bucks* 20, 351–383.

Myres, J.N.L., 1956. 'Romano-Saxon pottery' *in* Harden, D.B. (Ed) *Dark Age Britain*. 16–39 (London).

Neal, D.S., 1974. *The excavation of the Roman villa in Gadebridge Park, Hemel Hempstead 1963–8*. Report of the Research Committee of the Society of Antiquaries of London. 31 (Leeds).

Niblett, B.R., 1974. 'Excavations at Bradwell Abbey Barn, Bucks. 1971'. *Recs. Bucks.* 19, 483–500.

Oakley, K.P., Vulliamy, C.E. and Clive Rouse, E., 1937. The excavation of a Romano-British pottery kiln site near Hedgerley. *Recs. Bucks.* 13, 252–280.

Orton, C.R., 1977. 'The Roman Pottery (excluding samian) in Excavations at Angel Court, Walbrook', 1974 (T. Blurton). *Trans. London Middlesex Archaeol. Soc.* 28, 30–53.

Oswald, F., 1936–7. Index of Figure-Types on Terra-Sigillata ('samian ware'). Suppl. to The Annals of Archaeology and Anthropology (Liverpool).

Oswald, F. and Pryce, T.D., 1920. *An Introduction to the Study of Terra-Sigillata* (London).

Partridge, C., 1981. *Skeleton Green – A late Iron Age and Romano-British Site*. Britannia Monog. Series 2.(London).

Peacock, D.P.S.P., 1971. 'Petrography of the coarse pottery' *in* B.W. Cunliffe, *Excavations at Fishbourne* Vol. 2, 255–259. Society of Antiquaries of London, 27 (Leeds).

Peacock, D.P.S., 1982. *Pottery in the Roman world; an ethnoarchaeological approach* (London).

Perrin, J.R., 1981. 'The late Roman pottery of Great Casterton – thirty years on' *in* Anderson, A.C. and Anderson, A.S. (Eds) 447–463.

Petchey, M.R., 1978. 'A Roman Field System at Broughton, Buckinghamshire'. *Recs. Bucks* 20.4, 637–645.

Piboule, A., 1982. *Vases sigillés ornés au moule du Musée Thermal de Neris-les-Bains*. Rev. Arch. *Sites* 13 (Avignon).

Quinnell, H., forthcoming. 'Excavations at Cosgrove, Northants'.

Reece, R., 1981. 'Town and Country: the End of Roman Britain' *World Archaeology* Vol 12, 1, 77–92.

Reece, R., 1987. Report on Roman Coins from Wymbush, in R.M.K. 1987, 128.
Ricken, H., 1948. *Die Bilderschüsseln der römischen Töpfer von Rheinzabern*, Tafelband (Speyer).
Ricken, H., and Fischer, C., 1963. *Die Bilderschüsseln der römischen Töpfer von Rheinzabern*, Textband (Bonn).
R.M.K., 1987. '*Roman Milton Keynes; Excavations and Fieldwork 1971–82*'. Bucks Archaeol. Soc. Monog. Ser. 1.
Roberts, W.I., 1982. '*Romano-Saxon Pottery*'. Brit. Archaeol. Rep. 106 (Oxford).
Rodwell, W., 1978. 'Stamp-decorated pottery of the early Roman period *in* Eastern England' in Arthur, P. and Marsh, G. (Eds) 225–292.
Rogers, G.B., 1974. *Poteries sigillées de la Gaule centrale, i, Les motifs non figurés, Gallia* Suppl. XXVIII (Paris).
Sander, E., 1962. Der Praefectus fabrum und die Legionsfabriken. *Bonner Jb*. 162, 139-61.
de Schaetzen, P., and Vanderhoeven, M., 1955. *La Terra Sigillata a Tongres*. Bull. de l'Inst. archéol. liégeois. LXX 1955 (for) 1953–54 (Liege).
Simco, A., 1973. 'The Iron Age in the Bedford region'. *Bedfordshire Archaeol*. J. 8, 5–22.
Simco, A., 1984. *Survey of Bedfordshire. The Roman Period*. Bedfordshire County Council, R.C.H.M.
Simpson, G., 1957. 'Metallic Black Slip Vases from Central Gaul with Applied and Moulded Decoration'. *Antiq. J*. 37, 29-42.
Simpson, G., 1973. 'More Black Slip Vases from Central Gaul with Applied and Moulded decoration in Britain'. *Antiq. J*. 53, 42–51.
Simpson, G. and Rogers, G.B., 1969. 'Cinnamus de Lezoux et quelques potiers contemporains'. *Gallia* XXVII, 3–14.
Stanfield, J.A. and Simpson, G., 1958. *Central Gaulish Potters* (London).
Stead, I.M., 1976. *Excavations at Winterton Roman Villa and other Roman Sites in North Lincolnshire 1958–67*. Dept. of Env. Arch. Rep. 9 (London).
Suggett, P.G., 1954. 'Excavations at Brockley Hill, 1952 to 1953'. *Trans. London Middlesex Archaeol. Soc*. 11, 259-276.
Swan, V.G., 1975. Oare reconsidered and the origins of Savernake ware in Wiltshire. *Britannia* 6, 36–61.
Swan, V.G., 1978. *Roman Pottery in Britain*, Princes Risborough.
Swan, V.G., 1984. *The Pottery Kilns of Roman Britain*. Supplementary Series 5, R.C.H.M.: H.M.S.O. (London).
Symonds, R.P., 1980. *in* G. Lambrick 1980, 79-98.
Symonds, R.P., 1981. 'The application of chemical analysis to the study of 'Rhenish' wares, *in* Anderson, A.C. and Anderson, A.S. (Eds) 1981.
Tarrant, N. and Sandford, A., 1972. 'A Romano-British Kiln at Fulmer. *Recs Bucks* 19, 174–188.
Terrisse, J.-R., 1968. *Les céramiques sigillées gallo-romaines des Martres-de-Veyre. Gallia* Suppl. XIX (Paris).
Thompson, I., 1982. *Grog-tempered 'Belgic' Pottery of South-Eastern England*. Brit. Archaeol. Rep.108 (Oxford).
Tilson, P., 1973. 'A Belgic and Romano-British site at Bromham'. *Bedfordshire Archaeol. J*. 8, 23–66.
Turland, R.E., 1980. *in* Jackson, 'Roman Buildings at Ringstead, Northants'. *Northamptonshire Archaeol*. 15, 21–26.
Tyers, P., 1978. 'The poppy-head beakers of Britain and their relationship to the barbotine decorated vessels of the Rhineland and Switzerland', *in* Arthur, P. and Marsh, G. (Eds).
Vauthey, M. and Vauthey, P., 1963. 'Officine de Terre-Franche deux moules de vases 30 signés Cinnamus'. *Rev. Arch. du Cent.*, ii, 48–56.
Viatores, 1964. *Roman roads in the south-east Midlands* (London).
Waugh, H., Mynard, D.C. and Cain, R., 1974. 'Some Iron Age Pottery from Mid- and North Bucks with a Gazetteer of Associated Sites and Finds'. *Recs Bucks* 19,4, 373–421.
Wheeler, R.E.M., 1924. *Segontium and the Roman occupation of Wales* (London).
Wild, J.P., 1977. Note *in* Mynard and Woodfield 1977 371.
Williams, J., 1976. 'Excavations on a Roman site at Overstone, near Northampton'. *Northamptonshire Archaeol*. 11, 100–34.
Woodfield, C., 1977a. 'A Roman Military Site at Magiovinium?'. Recs Bucks 20,3, 384–409.
Woodfield, C., 1977b. The Pottery *in* Mynard and Woodfield 1977 354–377.
Woodfield, C., 1978. 'The Pottery' *in* M.R. Petchey 1978, 642–644.
Woodfield, C., 1983. 'The Pottery' *in* Brown A.E. and Woodfield C. 1983, 74–100.
Woods, P.J., 1967. 'A Mid-second century pottery group from Brixworth, Northants'. *J. Northampton Mus. & Art Gallery* 1, 5–27.
Woods, P.J., 1969. 'Excavations at Hardingstone, Northants 1967–68'. *Northamptonshire Archaeol*. 1969.
Woods, P.J., 1970. 'Excavations at Brixworth, Northamptonshire 1965–70. The Romano-British Villa, part I: The Roman coarse pottery and decorated samian ware'. *J. Northampton Mus. & Art Gallery* 8.
Woods, P.J., 1973. 'The Roman Pottery' *in* Hall, D.N., 'Rescue excavations at Radwell Gravel Pits 1972'. *Bedfordshire Archaeol. J*. 8, 73–90.
Woods, P.J., 1974. Types of late Belgic and early Romano-British pottery kilns in the Nene Valley. *Britannia* 5, 262–79.
Woods, P., Turland, R. and Hastings, S., 1981. ' A Romano-British Pottery at Biddlesden, Buckinghamshire', *in* Anderson, A.G. and Anderson, A.S. (Eds).
Woods, P. and Hastings, S., 1984. *Rushden: The Early Fine Wares*.
Woodward, P.J., 1977. 'Excavations at Pear Tree Farm, Elstow, Bedfordshire 1976'. *Bedfordshire. Archaeol. J*. 12, 27–54.
Young, C.J., 1977. *Oxfordshire Roman Pottery*. Brit. Archaeol. Rep. 43 (Oxford).
Young, C.J., 1977a. Note on the Oxford Wares *in* Mynard, D.C. and Woodfield, C. 1977, 370–371.

APPENDIX 1

THE FABRIC DESCRIPTIONS

Introduction
Detailed descriptions of most fabrics are given. Those not included are adequately described in the discussion of the fabrics in the main text.

Fabric 1a
Inclusions:
Shell: Abundant flakes of fossilized bivalves (such as Brachiopoda) largely unmarked, occasionally striated or bearing many minute indented dots. Average size approx. 1–2mm; range less than 0.5mm to c.6mm. Evenly distributed.
Iron: Common, soft powdery red/orange; common, dull soft black; common, hard lustrous black. Angular or rounded; largely less than 0.5mm. Occasionally reaching 1mm.
Quartz: Rare, white or clear, not visible to the naked eye.
Others: Rare uncrushed limestone fragments, can reach c.10mm.
Colour: Black, grey, pink, buff, off-white surfaces are most common, occasionally orange or red. Core grey, black or self-coloured.
Finish: Fairly hard and smooth although badly weathered pieces tend to be brittle and vesicular.
Forms: Lid-seated jars, wide-mouthed jars, necked bowls, narrow-necked jars, bowls, dishes, storage jars.
Decoration: Rilling, cordons, scored wavy lines, 'slashed' rims.
Source: Unknown local kilns and/or from Harrold in Bedfordshire which produced very similar material.
Suggested Date: First to fourth centuries AD.
Occurrence: : Extremely common.
Comments: There is a tendency for first century vessels to have orange or red surfaces, second century vessels to be buff or off-white with sparser more highly crushed shell, and fourth century vessels to be black and thin. The information on the Harrold kilns is unpublished material kindly supplied by Mr A.E. Brown.

Fabric 1b
Inclusions:
Fossil-shell: as in fabric 1a. very abundant.
Iron: Sparse flecks of black and red, generally less than 0.5mm.
Colour: Black, light brown, yellowish-brown.
Finish: Coarse, fairly hard, 'Prickly shelly' is an apt descriptive term.
Forms: Necked jars of an extremely simple S. form, probably handmade; handmade lid-seated jar.
Source: Unknown, possibly local, but occurs at Shakenoak, Oxfordshire.
Suggested Date: Late second to early third century.
Occurrence: Rare.

Fabric 2a
Inclusions:
Clay pellets: Moderate to abundant sub-angular rounded or, less frequently, angular clay pellets. Average size at least 0.5mm, with a range of c.0.06–3.00mm. Evenly distributed.
Quartz: Petrological examination has shown quartz to be the dominant inclusion in all samples. These are sub-angular or occasionally rounded and can be placed in the following size groups:
Small 0.05mm or less, c.56.8%
Medium 0.06–0.10mm, c.14.3%
Large 0.11mm or greater c.0.1%
However, with the naked eye or microscope with a magnification of ×20, only sparse quartz grains can be seen.
Iron: Iron ore occurs, in varying amounts, in each thin section.
Fairly common soft rounded red; sparse hard angular red; very sparse minute angular black. Generally less than 0.1mm, occasionally reaching 2.0mm.
Others: Sparsely to moderately micaceous. Contains primarily muscovite mica, although rare fragments of biotite can be seen. Limestone, sandstone or siltstone can occur, but are not necessarily found in every sample. Limestone is normally less than c. 0.2mm, with rare examples measuring as large as c. 1.5mm: sandstone or siltstone can be as large as c. 3mm, but is usually not greater than c. 1 mm. Inclusions which are not common, but occurred in most sections, included plagioclase and orthoclase, feldspar, quartzite and microcrystalline silica.
Colour: Pink, pink-buff or orange-buff surfaces with a pale grey core. The clay pellet inclusions fire a slightly darker shade on the surface and a whitish-grey in the core.
Finish: Soft, powdery, can be slightly 'lumpy'.
Forms: The most dominant form is the wide-mouthed necked bowl. Narrow-necked jars, small bowls or cups, storage jars and barrel-jars or cisterns also occur.
Decoration: Grooves or cordons, usually only about 2mm wide are common at the junction between neck and body. Girth grooves are fairly rare. Storage jars may have incised wavy lines around the shoulder. Red-brown or blue-grey painted designs have been found occasionally on body sherds, but possibly owing to the easily eroded nature of the fabric this is not common.
Source: Local. The fabric compares closely with fired clay samples taken from Caldecotte for petrological examination. The samples were derived form the Oxford clay beds of the Jurassic series which form the dominant exposed solid formation in this area.

Although apparently local in production, examples of this ware have been found as far afield as Gloucester, Wanborough and even Chester (C. Woodfield, pers. comm.).
Suggested Date: Approx. AD 160/170–400+.
Occurrence: Very common.

Fabric 2b
Fabric: As in 2a with the exception that quartz is the most apparent inclusion and the finish is sandy and less soft.
Forms: As 2a with the exception of the barrel-jars or cisterns.
Decoration: Cordons may be less ephemeral than on 2a; no painted sherds yet found.
Source: As 2a.
Suggested Date: Early examples of this sub-group were found in features related to Kiln II at Caldecotte and therefore may be of a similar date, ie. early second century AD; it bridges the gap between 'Belgic' grogged ware and the later more common Fabric 2a. The type continues into the late second-early third century.
Occurrence: Sparse.

Fabric 2c
Fabric: As with 2a with the exception that fossil shell and limestone fragments are the most apparent inclusions. The finish is powdery, extremely 'lumpy' and of crude appearance.
Forms: As with 2b.
Source: As 2a.
Suggested Date: Mid/late second to early third century.
Occurrence: Sparse.

Fabric 2d
Fabric: As with 2a except that the surface colour is blue-grey and the finish is hard and smooth. It frequently shows signs of having cracked in firing.
Forms: Storage jars.
Decoration: Incised wavy lines.
Source: As 2a.
Suggested Date: Second to fourth century.
Occurrence: Sparse.

Fabric 3a
Inclusions:
Largely found in thin-section Group 12, but also occurs in Groups 13 and 15 (see pages 85–86).
Colour: The surfaces are various shades of grey, often with a blue or yellowish tinge. The core is blue-grey or yellowish-grey and is usually paler in colour than the surfaces. It may have red or reddish-brown margins. Some vessels have been slipped or colour-washed with white, blue-grey or grey.
Finish: Sandy, gritty feel where not slipped or burnished. Generally hard and dense with a jagged fracture, although adverse soil conditions(?) or inadequate firing? have produced some softer sherds.
Forms: Necked jars/bowls with everted rims; rounded, folded or triangular undercut. Flanged bowls, straight-sided dishes (dog-dishes), straight and round-sided pie-dishes/bowls, grooved pie-dishes, flared everted-rim neckless round-bodied bowls, indented/folded beaker (one only),'dimpled' body sherd from a jar or bowl.
Decoration: Burnishing, slips or 'washes', burnished arcs, lattice or 'scribbles', vertical lines scored through the slip, cordons, grooves; dimples rare.
Source: Local.
Suggested Date: Second – fourth century.
Occurrence: Very common. This is the standard Roman greyware for this area.
Comments: Closely related to Fabrics 9, 19/29, 32 and 47. Although slips appear on the greywares throughout the whole period, the majority of the better, thicker slips seem to occur on the second-century vessels.

Fabric 3c
Inclusions:
Largely found in thin-section Group 13, but also occurs in Groups 12 and 15.
Colour: A grey-ware distinguished by a red, orange or brown core. May occasionally have a white or grey slip.
Finish: A fairly hard sandy fabric with a jagged fracture.
Forms: Wide-mouthed jars or bowls, small jars/beakers, unguent jar?, lid-seated jar/bowl, pie-dish, dog-dish, everted-flared-rim neckless bowl with rounded body, flanged bowl.
Decoration: Slips (grey or white), burnishing, cordons and grooves. One body sherd has traces of a painted orange horizontal line over a white slip.
Source: Local.
Suggested Date: Late first to fourth century but largely second.
Occurrence: Moderate.
Comments: Very closely related to Fabrics 3, 9, 19/29, 32 and 47. As with Fabrics 3a and 9a the better slips are found on the second-century vessels.

Fabric 3f
Inclusions:
Found in thin-section Group 16.
Colour: Medium grey surfaces with a red core.
Finish: Sandy, very hard, dense, fairly coarse apparance.
Forms: Jar or bowl with everted rounded and slightly beaded rim.
Decoration: Traces of a two-coloured – black and grey – slip or slurry. Very eroded.
Source: Unknown.
Suggested Date: Possibly fourth century.
Occurrence: Very rare.
Comments: It was thought that the individual nature of this sherd and its date indicated a possible outside source. Alice Holt appeared the most likely centre, but Malcolm Lyne does not believe it to be an Alice Holt product.

Fabric 3gj
Inclusions:
Found in thin-section Groups 14 (see page 86) and 8 (see page 85).
Colour: Various shades of grey with brownish-yellow grey and blue-grey predominating. Core colour ranges from very dark grey to very pale blue-grey. A number of sherds have traces of a thin grey slip.
Finish: Coarse sandy feel, though fairly soft. Varies in density from a fairly open texture (thin-section Group 8) to the closer-knit thin-section Group 14.

By eye these can be difficult to tell apart.

Forms: Wide-mouthed jars/bowls, narrow-necked jars, pie-dishes/bowls, dog-dishes, lid-seated jar, lid-seated bowl.

Decoration: Slips/washes, cordons and grooves, stabbing.

Source: Local.

Suggested Date: Second century.

Occurrence: Not common.

Comments: Appears from visual inspection and thin-sectioning to be linked to the material from the Caldecotte kiln II.

Fabric 3k

Inclusions:

Found in thin-section Group 3 (see page85)

Colour: Various shades of grey, with pale grey predominating. The cores are usually paler shades of grey, but red or orange are also frequently found. On a small number of sherds the surfaces have a patchy orange, pale pink or light brownish bloom.

Finish: A fine, sandy, unsmoothed feel; dense, but fairly soft. Old fractures are well rounded or hollowed.

Forms: Pie-dishes, straight-sided dishes (dog-dishes), wide-mouthed jars/bowls, narrow-necked jars, beakers, jar/bowl with double rim, body sherd of an indented/folded beaker.

Decoration: Burnished latticing most common.
Rouletting (coarse) on a beaker sherd.
Small cordons and grooves.
Slips.

Source: Local.

Suggested Date: Late first to second century.

Occurrence: Moderate.

Comments: A grey version of 9f, see page 177.

Fabric 3n

Inclusions:

Found in thin-section Groups 13 and 14

Colour: Surfaces tend towards a darker grey than 3a, with a dark blue-grey core.

Finish: A coarse, open texture, gritty to the touch. Old fractures have become smooth and rounded.

Forms: Globular-bodied jars/bowls with grooves and cordons, pie dishes, small jars/beakers.

Decoration: Cordons and grooves, black, grey or white slips, burnishing.

Source: Local.

Suggested Date: Second century.

Occurrence: Rare

Comments: A minor group only, composed of a handful of sherds.

Fabric 5 Fabric: Oxford Parchment Ware (Description after Young 1977).

Inclusions:

Hard sandy ware, sometimes with small black and red inclusions.

Colour: White or off-white, frequently with a pink core. The ware can also be pink or light pink/orange throughout.

Finish: Smoothed

Forms: Oxford type P.24, a wall-sided bowl moulded at rim and carination.

Decoration: Red paint, sometimes overfired to black, was widely used for geometric or curvilinear designs and simple horizontal bands.

Source: The Oxfordshire kilns.

Suggested Date: 240 – 400+ AD.

Occurrence: Very rare.

Comments: For a detailed discussion of this ware see Young, (1977, 80–92).

Fabric 6

Inclusions:

Quartz: Abundant minute grains; transluscent, opaque and occasionally pink. Difficult to determine even with the use of a X20 microscope. Occasional quartz grains up to 1mm in size.

Iron: Sparse red/orange flecks, usually less than 0.5mm, occasionally reaching 1–2mm; rounded, subangular or angular.
Sparse black flecks, usually less than 0.1mm but can reach 4mm in size. Both the black and orange iron inclusions can appear as small 'streaks' within the fabric.

Others: Sparse soft white material that does not react to hydrochloric acid. This material is often difficult to determine within the whiter fabrics, wherein it appears as a whiter patch or 'streak', but in the coloured fabrics it can appear as a very obvious rounded or sub-angular lump. Size varied considerably; less than 0.5mm to 4mm.

Fabric Colour: White, cream, pink, buff, orange, brown or grey.

Colour-coat: Orange, orange-brown, pale orange, brown, dark brown, reddish brown, reddish-yellow, red, blue-grey, grey, black.

Finish: Hard and smooth.

Forms: Beakers, jars, flagons/bottles, imitation samian forms, bowls, dishes, Castor boxes, and cups (for Lower Nene Valley mortaria see pages 131–132).

Decoration: Colour-coated, painted, barbotined, rouletted, bossed, indented, grooved and moulded (as with face flagons).

Source: Lower Nene Valley; kilns at Water Newton, Stibbington, Stanground, Chesterton and Sibson.

Suggested Date: Late second to fourth century+.

Occurrence: Common.

Comments: For a fuller discussion on this ware see M D Howe, Perrin and Mackreth 1980.

Fabric 7

Fabric description after R.P. Symonds (1981, 359)

Fabric/Colour: 'Rhenish' wares are characterized by a fine red fabric, sometimes having a light or dark grey core, with a very glossy polished or metallic black, or dark red or dark green colour-coating.

Forms: They usually occur as beakers and cups, or less frequently, carafes or flagons.

Decoration: Typical decorations are rouletting, indenting, folding, and decorations 'en barbotine', either under the colour-coating or painted on it in a white 'paint'. Barbotine decoration under the colour-coat is more typical of central Gaulish vessels. The white 'painted' decoration is more common to vessels from the Rhineland, where they are referred to as *spruchbecher*, or 'motto' beakers, because the decoration often consists of a repeating scroll underneath a word, or 'motto', usually an exhortation to drink.

Source: Central Gaul and the Rhineland.

Suggested Date: They were imported into Britain

from the early second century, to the late third century AD., although the Milton Keynes examples date from the mid second to the mid third centuries.

Occurrence: Not common.

Comments: Dr Symonds has chemically analysed (X-ray flourescence and atomic absorption spectography) a number of Milton Keynes sherds to distinguish between those from the Rhineland and those from Central Gaul.

Fabric 8 After Farrar 1973

Inclusions:

Quartz: Heavily charged with coarse rounded subangular grains.

Others: Fractures commonly show smooth rounded shale particles up to c.8mm long, oxidized or black according to sherd condition.

Lumps of fabric white material – up to c.8mm – of chalky appearance, or more often, holes apparently lined with the same: these do not react with hydrochloric acid and may be gypsum.

Colour: Essentially black or dark grey throughout, although a very thin reddish, brownish or brownish-grey layer is common immediately under the black surface and is sometimes thick enough to leave only a black core.

Finish: Hard, gritty where not burnished or where the burnish is eroded.

Forms: Handmade range of cooking pots, straight-sided dishes (dog-dishes), flanged bowls and flat-rimmed bowls or dishes.

Decoration: Distinctive burnishing, showing the marks or facets of short individual strokes, burnished latticing, arcs or doodles across a matt background.

Suggested Date: In this area late second to fourth century.

Source: Dorset (Isle of Purbeck).

Occurrence: Rare.

Comments: For detailed discussions of this ware see Farrar 1973 on techniques and sources and Gillam 1976 for a morphological study.

Fabric 9a

Inclusions:

Largely found in thin section Group 12, but also occurs in Groups 11, 13 and 15 (see pages 85–86).

Colour: Black surfaces with a dark or light grey core, the latter often having a yellowish tinge. Red or reddish-brown margins are common. With some vessels the surface colour is not the result of reduced firing but of a black slip or wash; these have not been treated as a separate group owing to the difficulty of determining, on the more worn pieces, which of the surfaces is present.

Finish: Sandy, gritty feel where not slipped or burnished. Generally hard and dense with a jagged fracture, although adverse soil conditions or inadequate firing (?) have produced some softer examples.

Forms: Predominantly BB1 copies: flanged bowls and straight-sided dishes (dog-dishes), triangular-rimmed dishes and bowls (pie-dishes), grooved pie-dishes. BB1 jars do not appear to have been imitated.

Wide-mouthed triangular-rimmed jars/bowls, wide-mouthed everted rounded rimmed jars/bowls, narrow-necked globular-bodied jars, lid-seated jars, wide mouthed shallow bowls, reeded rim bowl (one only), double-rimmed jar/bowl (one only), ? copy of a Samian form 29 or Camulodunum 68, ? bottle/flagon (one rim fragment only).

Decoration: Burnishing, slips, washes – burnished slips often produced linear markings.

Burnished arcs, lattice or 'scribbles'.

Vertical scoring into the slip.

Small cordons and grooves.

Source: Local.

Suggested Date: Late first to fourth century.

Occurrence: Very common.

Comments: The most common 'blackware'. Closely related to Fabrics 3, 19/29, 32 and 47.

Many of the better slips are found on mid to late second-century vessels, but, as with the greywares, this is a generalisation and good slips are found on later items, though not as frequently.

Occasionally it is found that the slip has fired unevenly, producing either a streaky black/white surface, or more usually, a good black coating with white or grey patches. Also, owing to firing techniques, it is sometimes found that the slip has fired a different colour on the interior and exterior faces.

Fabric 9b

Inclusions:

Largely found in thin-section Group 12 (see page 85).

Colour: Black surfaces with a red or reddish-brown core. The surface may be due to reduced firing or to a slip or wash.

Finish: Sandy, gritty feel where not slipped or burnished. Generally hard and dense with a jagged fracture, although adverse soil conditions or inadequate firing ? have produced some softer examples.

Forms: Flanged bowls, straight-sided dishes (dog-dishes), one with handles, wide-mouthed jars, sieve, colander, cheese press? (one body sherd only), stamp-impressed bowl – one only.

Decoration: Burnishing, slips and washes, stamps, cordons.

Source: Local.

Suggested Date: Second to fourth century.

Occurrence: Moderate.

Comments: Closely related 3, 19/29, 32 and 47.

Fabric 9f

Inclusions:

Found largely in thin section Group 3, but also in Group 5 (see page 85).

Colour: Black surfaces, either fired in a reducing oven or given a black slip. Red margins are not uncommon; on occasion the entire core is red, though it is more commonly grey, yellowish-grey or brownish-grey.

Finish: Fine, sandy feel except where slipped. Dense but soft. Old fractures are well rounded or hollowed.

Forms: Pie-dishes, straight-sided dishes (dog-dishes), round-sided dog-dish, narrow-necked jars, wide-mouthed jar, reeded hammer-headed bowl/lid?

Decoration: Burnished latticing, slips, cordons and

grooves, incised lines.
Source: Local.
Suggested Date: First to second century.
Occurrence: Infrequent.
Comments: A black version of 3k (see page 176).

Fabric 9j
Inclusions: Found in thin-section Group 2 (see page 85).
Colour: Black surfaces either fired in a reducing oven or given a thin black slip with very pale pink/buff margins and medium-grey core.
Finish: Fairly sandy feel, except where well smoothed.
Forms: Body sherds only – Indented/folded vessel, high-shouldered vessel possible lid.
Decoration: Slipping.
Source: Local.
Suggested Date: Rare.
Comments: A minor subgroup, separated from 9a because it appeared less coarse.

Fabric 9xy
Inclusions:
Found in thin-section Group 13 (see page 85).
Colour: Black surfaces, produced by reducing conditions, most frequently occurring with a distinctive red margin or underskin, and dark grey core. The outer surface has a tendency to flake or clip, leaving the red (or occasionally grey) underskin to show through in patches.
Finish: Fairly coarse and sandy, occasionally smoothed on the outer face. Softer and less dense than 9a.
Forms: Wide-mouthed jars, narrow-necked jars, lid-seated jars, ? Copy of a Camulodunum 48, ? Gallo-Belgic platter copies – or lids.
Decoration: Burnishing, burnished lattice, cordons and grooves.
Source: Local.
Suggested Date: Late first to second century.
Occurrence: Moderate.
Comments: Often difficult to distinguish from Fabric 46qr (see page 192). It is possible that 9xy is a passage fabric between 46qr and the totally romanized Fabric 9a.

Fabric 9g/12
Inclusions:
Found in thin-section Group 5.
Colour: Black surfaces with white, pink or buff cores. Occasionally the core has fired pale or dark grey with white 'underskin' or margins.
Finish: Fine, smoothed feel, hard and dense.
Forms: Dog-dish, deep-bowl?, wide-mouthed jar.
Decoration: Cordoning, lattice.
Source: Possibly local although thin-sectioning relates this fabric to Group 5 which is largely composed of suspected Northamptonshire wares. It also greatly resembles a sherd plucked from the topsoil over the Ecton kilns. However, it also resembles Fabric 12, the grey surfaced, white-cored fabric from the Lower Nene Valley. It was this initial similarity which gave this sub-group the suffix 12.
Suggested Date: Second century.
Occurrence: Rare.
Comments: Possibly an import from the Nene Valley kilns – unfortunately it occurs in such small quantities that all relationships are tenuous.

Fabric 9e/14
Inclusions:
Largely found in thin-section Group 15, with some in Group 13.
Colour: Black or very dark grey surfaces, occasionally purplish-brown or lighter grey on the inner facce. Cores are black, purplish-brown or white.
Finish: Gritty, dense and very hard. Fractures tend to be jagged.
Forms: Pie-dishes, wide-mouthed jars, lid-seated jars, double-beaded dog-dish, beaker.
Decoration: Burnishing, burnished lines, grooves, slips.
Source: Thin-sectioning relates this fabric to Groups 3 and 5, which are presumed local. By eye the pieces are seen to contain finer paler quartz than 3 and 5; this gives them the look of Fabric 14, a Northamptonshire product – hence the 14 suffix.
Suggested Date: ?Late first to early/mid third century.
Occurrence: Rare.
Comments: Vessels with groove decoration (Fig.30,11) are common in Northamptonshire (Johnston 1969). It is of course also possible that this is a local copy of the same trait.

Fabric 12
Inclusions:
Quartz: Sparse to abundant translucent, opaque and light milky grey. Despite the uniformly minute size of these grains unburnished sherds can have a lightly pitted speckled appearance.
Iron: Sparse red/orange flecks, usually less than 0.5mm, occasionally reaching 1–2mm. Sparse black flecks, usually less than 0.1mm but can reach 4–5mm in size.
Others: Sparse soft white material, that does not react to hydrochloric acid. Rounded or subangular; less than 0.5mm to c. 4mm.
Colour: Most commonly white with grey surfaces. Less frequently grey cored or with surfaces of speckled white and grey.
Finish: Hard. Unburnished examples feel slightly sandy, burnished pieces are rather silky and smooth.
Forms: Narrow and wide mouthed jars, bowls, dishes and flagons. As of yet no examples of the latter have been recovered from Milton Keynes.
Decoration: Cordons, grooves, rouletting, slashing and burnishing.
Source: Lower Nene Valley.
Suggested Date: Late second to ?early third century.
Occurrence: Sparse.
Comments: For a fuller discussion of this ware see Howe, Perrin and Mackreth 1980.
Lower Nene Valley greywares can be difficult to distinguish from Upper Nene Valley greyware products – Fabric 14 (see page 000). Although the fabric of the latter may be harder and more varied in colouring, there are always sherds that appear to fit both categories.

Fabric 13a

Fabric description taken from Arthur 1978.

Inclusions:

Thin-sectioning by Dr D. F. Williams of a south-eastern group vessel from Southwark shows the fabric to have "frequent grains of subangular quartz, averaging 0.05 to 0.1mm in size, with a sprinkling of larger grains up to 0.35mm. There were also a few plagioclase felspar grains and plentiful flecks of mica. Mica is not always evident and this might indicate vessels fired over 1000° c. when the mineral will fuse".

Colour: The fabric is generally a medium grey, sometimes partly oxidised red-brown.

Finish: Fairly hard and fine.

Forms: The repertoire includes imitation Dr. 30 beakers, Dr. 37 bowls, pear-shaped flagons and some globular beaker forms.

Decoration: Lead-glazing, white or cream under-glaze barbotine or white colour-coat.

Source: ? Staines, Middlesex.

Suggested Date: c. 80 AD to the Hadrianic period, perhaps early on.

Occurrence: Rare.

Comments: For a detailed description of this ware see Arthur in Arthur and Marsh BAR 57, 1978 p. 293.

Fabric 13b

Inclusions:

Quartz: Common, white and clear fine grains invisible to the naked eye, not uniform in size, up to c. 0.1mm.

Iron: Common, soft red/orange flecks, rare minute rounded black inclusions.

Others: Rare mica platelets.

Colour: Deep orange throughout.

Finish: Soft and slightly powdery.

Forms: To date – one rim and one body sherd from a possible imitation Dr. 30/37.

Decoration: Barbotine on relief moulded overlapping half-circles; interior and exterior white colour-coated and brownish-green glaze.

Source: Uncertain.

Suggested Date: Found in a feature (F1 MK307) dated late first to early second century AD.

Occurrence: Rare.

Comments: The pieces have kindly been examined by Paul Arthur who says, "Two sherds of a Romano-British lead-glazed vessel. The surfaces, including the glaze, have been altered by the acid(?) nature of the soil. The vessel imitates samian, possibly the form Dr 37 (or Dr 30) and is presumably late first or early second century in date. I know of no exact parallel, and the fabric does not appear distinctive enough for it to be assigned by eye to any of the known groups".

Fabric 13c

Inclusions:

Quartz: Very sparse, angular, clear, white and grey, reaching 0.5mm.

Iron: Sparse soft orange-brown and black flecks, generally minute but can reach c. 3mm.

Others: Sparse mica platelets.

Colour: Cream-white

Finish: Fine, soft and slightly powdery.

Forms: To date only one body sherd has been found: it appears to have been part of a large beaker.

Decoration: Bright greenish-yellow lead glaze, white barbotine dots.

Source: Central Gaul (St Rémy Ware).

Suggested Date: The sherd was found in a late first to mid second century feature. The ware is mainly pre-70 AD but staggers on into the Flavian period.

Occurrence: Very rare.

Comments: Checked by Dr. Kevin Greene.

Fabric 14a

Inclusions:

Quartz: Sparse to common, clear, white, occaionally light grey, rarely pink. Av. size 0.1mm to 0.2mm although can vary from under 0.1mm to c. 0.50mm.

Iron: Sparse to common black and red-brown, rounded and subangular. Generally 0.1mm to 0.2mm; can reach c. 4mm.

Others: Sparse soft white flecks or yellow-white lumps that do not react with acid.

Colour: Surfaces dark grey, light-grey, silver-grey, blue-grey, greyish-white, yellowish or brownish grey, occasionally black, combined with self-coloured, orange, pinkish-orange, pinkish-grey, red or white cores. The cores may also occasionally exhibit a sandwich effect.

Finish: Hard and sandy, or fine and smooth from burnishing.

Forms: Wide-mouthed jars or necked bowls, narrow-necked jars, triangular-rimmed bowls and/or dishes, flanged bowl, dog-dishes, beakers.

Decoration: Burnishing, latticing (burnished), slips, self-coloured barbotine studs, frilling, notching, grooves, cordons.

Source: Possibly the Upper Nene Valley/ Northamptonshire, and also perhaps kilns on the Bucks-Northants border such as Biddlesden.

Suggested Date: Second to early third century?

Occurrence: Sparse.

Comments: Can be difficult to determine from Lower Nene Valley greywares.

Fabric 14b

Inclusions:

Quartz: Sparse, clear, white occasionally light grey, rarely pink. Av. size under 0.2mm.

Iron: Sparse to common, black, 0.1mm to c. 5mm; sparse soft orange or dark red up to c. 0.5mm.

Others: Sparse white flecks.

Colour: Dark to light grey surfaces, frequently self-coloured or with a blue-grey, red, pinkish-orange or greyish-white core. May have a purplish hue.

Finish: Hard and fine.

Forms: Wide-mouthed jars or necked bowls, beakers, pie-dishes.

Decoration: Burnishing, rouletting.

Source: Possibly the Upper Nene Valley/ Northamptonshire.

Suggested date: Predominately second century.

Occurrence: Rare.

Comments: Can be difficult to determine from Lower Nene Valley greywares.

Fabric 14c

Inclusions:

Quartz: Common to abundant, av. size 0.2 to 0.3mm. Clear, white occasionally light grey, yellowish and pink.

Iron: Black, rounded or angular up to c. 1mm. Sparse soft orange flecks.

Others: Sparse soft white flecks.

Colour: Dark grey or blue-grey surfaces, commonly speckled in appearance with off-white, pale brownish-pink, red or light grey cores.

Finish: Hard and sandy.

Forms: Wide-mouthed bowls with sharply everted or drooping rims, straight-sided bowls, tall-necked beaker, double-rimmed bowls or jars, triangular-rimmed bowls.

Decoration: Cordons, grooves, latticing.

Source: Possibly the Upper Nene Valley/ Northamptonshire.

Suggested Date: Late first to second century.

Occurrence: Sparse.

Comments: Can be difficult to determine from Lower Nene Valley greywares.

Fabric 14/33

Inclusions:

Quartz: Abundant, clear white, occasionally light grey and pink. Fairly uniform in size, av. 0.2 to 0.3mm.

Iron: Black, rounded and angular up to c. 1mm, sparse soft orange flecks.

Others: Sparse soft white flecks.

Colour: Light-grey, dark grey, blue-grey, greyish-white, surfaces are occasionally speckled and may have a yellowish tinge. Cores are self-coloured, white or pinkish-orange or may have a sandwich of these colours.

Finish: Hard and granular or gritty.

Forms: Wide-mouthed bowls, narrow-necked jars, wide-mouthed necked jar or bowl.

Decoration: Cordoning, double rims.

Source: The Upper Nene Valley/Northamptonshire or possibly the Verulamium region kilns.

Suggested Date: Late first to second century?

Occurrence: Rare.

Fabric 15

Inclusions:

Quartz: Sparse to common, minute white and clear largely 0.05mm and under (difficult to determine even with ×20 magnification) but occasionally reaching c.0.6mm

Iron: Sparse to common orange-brown up to c.0.5mm, Sparse black angular and rounded, up to c.1mm.

Others: Heavily micaceous; possible organic matter; rare calcareous inclusions.

Colour: Micaceous black/dark grey surfaces. Fresh fractures show the core to be a light yellowish-grey or dark brownish-grey; worn fractures are generally off-white or very pale grey. One sherd has a brownish-red 'underskin'.

Finish: Hard, fine smooth surfaces, with jagged breaks, even when worn. The fabric is not dense; magnification reveals occasional small voids.

Forms: Deep bowl, 'London-ware' type copying a Dr 37; shallow bowl with out-turned drooping rim, possibly copying a Dr 36.

Decoration: Engraved compass-scribed semi-circle, dots, lines, cordons and grooves, burnishing.

Source: Unknown. The fabric is not that of 'London-ware'. Copies of the so-called 'London-ware' are found widely in southern England and were presumably made in a number of centres. ie. Oxfordshire, Young 1977 fig.83,R68, and Howe, Perrin & Mackreth 1980 fig 2, 23.

Suggested Date: Second century.

Occurrence: Very rare.

Fabric 16

Inclusions:

Quartz: Moderate, white, clear and occasionally pale grey, generally 0.1mm or under, may reach c.0.3mm.

Iron: Sparse to moderate soft rounded orange up to c.1–2mm, orange 'streaks' and sparse minute brown/black flecks.

Others: A single hard, subangular purplish-brown inclusion (possibly iron?) 3.5mm. Sparse rounded voids - calcareous material washed or fired out?

Colour: Cream coloured core with very pale pink surfaces.

Finish: Very hard and fairly smooth. Old fractures retain their jagged quality.

Forms: Bowl - Dr. 36 copy.

Decoration: Brownish-orange paint, forming a running flow
of half-circles along the rim.

Source: ? Northamptonshire.

Suggested Date: Late first to second century.

Occurrence: Extremely rare.

Comments: The fabric of this rim is very similar to that of 17f (see page 181), which is also believed to be a Northamptonshire product, but because of the painted decoration on this rim it was thought necessary to give this material a separate identity.

Fabric 17a

Inclusions:

Quartz: Sparse to common, clear, white and grey. Av size 0.1 to 0.2mm although can vary from under 0.1mm to c.0.5mm.

Iron: Common, soft dark red and orange, under 0.5mm to c.3mm, rare black flecks.

Others: Sparse soft white inclusions.

Colour: Pale orange, pinkish-orange, very pale or medium pink. Cores may be self-coloured, light grey, or deep orange or contain layers of colour combining grey, pink, pale orange, buff or off-white.

Finish: Varies considerably - hard to soft. Usually smooth but slightly sandy sherds are also found.

Forms: Wide-mouthed jars, small bowls, beakers.

Decoration: Rouletting, grooves, incised wavy lines, burnishing, thin colour-washes (blue-grey and dark brown).

Source: Probably the Upper Nene Valley.

Suggested Date: Predominantly second to early third Century?

Occurrence: Sparse.

Comments: May be related to fabric 41b.

Fabric 17b

Inclusions:

Quartz: Very common, clear white occasionally grey, generally c.0.25mm-0.5mm. in size but can

reach c.1mm.

Iron: Moderate quantity of soft dark red/orange, under 0.5mm to c.2mm; very sparse hard rounded black inclusions.

Others: One sherd contains a soft grey angular lump, 3mm in length which is probably grog. Very sparse soft white inclusions.

Colour: Brownish-orange, pinkish-orange, pale orange, self-coloured or with a core of deeper orange, light grey or light buffish-orange.

Finish: Very hard and sandy (not granular); smooth where slipped or burnished.

Forms: Small wide-mouthed bowls, reeded hammer-headed mixing bowl?

Decoration: Burnishing, slips/washes, grooves, rouletting.

Source: Possibly the Upper Nene Valley/Northants.

Suggested Date: Predominantly second to early third century?

Occurrence: Very rare.

Fabric 17c

Inclusions:

Quartz: Abundant, clear, white and occasionally pale grey, size largely 0.2mm to 0.3mm, though can vary from less than 0.1mm to c.0.5mm.

Iron: Sparse to common black and red inclusions. Size 0.1mm to 0.5mm, occasionally reaching 3mm.

Others: Sparse soft white flecks or streaks that do not react with acid.

Very sparse calcareous inclusions; soft, white and react positively with acid. Size 1–5mm. Not always present.

Colour: Orange, brownish-orange, pinkish-orange, pink, self-coloured or with grey, off-white core.

Finish: Hard and granular or gritty.

Forms: Wide-mouthed jars, flagons, beakers, bowls.

Decoration: Dark brown or grey colour-washes, grooves, rouletting, burnishing, roughcasting.

Source: Upper Nene Valley/Northamptonshire?

Suggested Date: Late first to second century?

Occurrence: Sparse.

Fabric 17d

Inclusions:

Quartz: Sparse to fairly common, clear, white and occasionally pale grey, generally fine, 0.1mm or under, may reach c.0.3mm.

Iron: Sparse soft rounded orange, sparse brown and black, generally 1–2mm or under.

Others: Sparse soft white lumps or streaks, 2mm or under, do not react with acid.

Very sparse soft white calcareous flecks, usually under 1mm., do react with acid.

Colour: Pale orange, brownish-orange, deep orange, pinkish-orange, pink, dark cream. Cores may be self-coloured, grey, off-white or a sandwich of these colours.

Finish: Very hard, fairly smooth, tendency to be brittle.

Forms: Wide-mouthed jars, bowls, beakers, an 'oddity'.

Decoration: Burnishing, roughcasting, grooves, colour-washing (dark red, dark brown and grey), indentation.

Source: Possibly Upper Nene/Northants.

Suggested Date: Largely second century to early third?

Occurrence: Sparse.

Fabric 17e

Inclusions:

Quartz: Sparse, clear, white and occasionally pale grey; fine, the majority being under 0.1mm, a quantity at or just over 0.1mm with the occasional grain reaching 0.3mm.

Iron: Sparse black and soft red or orange, generally under 0.1mm, can reach c.2mm.

Others: Sparse soft white inclusions that do not react with acid, less than 2mm.

Colour: Orange, pale orange, pink, dark cream, buff. Cores are generally either blue-grey or deep orange or may be a sandwich of these colours.

Finish: Soft to fairly hard, smooth.

Forms: Beakers.

Decoration: Burnishing, rouletting, indentation, colour-washes (grey or dark brown) slips (white or black) incised lines, burnished latticing.

Source: Possibly Upper Nene Valley/Northants.

Suggested Date: Largely second century to early third?

Occurrence: Sparse.

Fabric 17f

Inclusions:

Quartz: Moderate, white, clear and occasionally pale grey, generally 0.1mm or under, may reach c. 0.3mm.

Iron: Sparse to moderate, soft rounded orange up to c. 1–2mm, orange 'streaks' and sparse minute brown/black flecks.

Others: Sparse rounded voids – possibly calcareous material washed or fired out.

Colour: Surface usually pale pink, very pale grey or pale yellow in colour; may be streaky in appearance. Cores generally off-white or cream although thicker pieces may have a thin grey or orange central vein.

Finish: Very hard and fairly smooth.

Forms: Necked jars or bowls.

Decoration: Burnishing, cordons, thin washes.

Source: ? Northamptonshire/Upper Nene Valley.

Suggested Date: Predominantly second to early third century?

Occurrence: Rare.

Comments: Fabric of this subgroup is very similar to that of a painted sherd in Fabric 16 (see page 180).

Fabric 18a

Inclusions:

Quartz: Moderate to sparse, 0.1–0.2mm in size.

Iron: Red and black inclusions can vary in quantity enormously, with some fairly fine sherds containing many black streaks and flecks which are only visible under a microscope. These inclusions are generally 0.25mm and under, though some, especially the red/brown pieces, can reach c. 3mm in size.

Colour: White or off-white, occasionally pink.

Finish: Varied – some vessels are very hard and smooth, others soft and powdery.

Forms: Flagons/bottles (generally small), beakers, miniature wide-mouthed jar, triangular rimmed pie-dish.

Decoration: Barbotine dots (orange).
Grooves.
Source: Appears to be from more than one source. Not known.
Suggested Date: Late first to second century.
Occurrence: Fairly rare.

Fabric 18b
Inclusions:
Quartz: Common to moderate, varied grain size, generally under 0.25mm but can reach 0.5mm.
Iron: Moderate to sparse red and black flecks, can reach 1.5mm.
Other: Soft white inclusions that do not react with acid.
Colour: White or yellow-white, commonly with pink 'underskin' and grey core on thicker sherds. Also occasionally pink-surfaced with a white core.
Finish: Fairly coarsely made. Tendency to be soft and slightly powdery.
Forms: Wide-mouthed jars with folded rims.
Decoration: Roughly impressed frill.
Source: Probably the Nene Valley.
Suggested Date: ? Late second century.
Occurrence: Rare.
Comments: Bears some resemblance to Lower Nene Valley material (Rob. Perrin pers.comm.).

Fabric 18c
Inclusions:
Quartz: Abundant to common, varied grain size up to c. 0.5mm.
Iron: Common red and black, generally under 0.25mm but can occasionally reach c. 3m.
Colour: White, off-white, cream, buff, pale-pink, occasionally with brown or greyish patches. Core can be self-coloured, pink or light orange.
Finish: Fairly hard. Scattered quartz grains are usually visible on the surface of the pot.
Forms: Ring-neck flagons, reeded-rim bowls, miniature pots or parts of triple vases?, wide-mouthed jars, plain wall-sided flagons, as with the Oxford form W8.2 (Young 1977), Jug (body only), possibly resembling the Oxford form W.31 (ibid), bowl with out-turned downward facing rim, jar/bowl with cordoned/corrugated shoulder, bowl with up-turned rim, flanged bowl with high bead – resembles the form of a small mortarium but has no trituration grit.
Decoration: Cordons with diamond-shaped impressions.
Grooves.
Source: Northamptonshire, Oxfordshire or possibly the Verulamium region.
Suggested Date: Second century, possibly third century.
Occurrence: Moderate.
Comments: A very varied fabric.

Fabric 18g
Inclusions:
Quartz: Abundant, fairly uniform in size, c. 0.25mm.
Iron: Sparse to rare red and black flecks.
Colour: White, off-white, pink, pale orange, occasionally greyish. Core self-coloured or pink.
Finish: Hard, granular.
Forms: Ring-necked flagons, wide-mouthed jars, wall-sided flagon with grooves.
Decoration: Grooves.
Source: Probably the Verulamium region.
Suggested Date: Late first to second century.
Occurrence: Fairly rare.

Fabric 19/29
Inclusions:
Found in thin-section Group 12 (see page 85).
Colour: Orange-brown, red-brown, occasionally pinkish-brown. Cores are self-coloured (often with a thin central vein of grey), purplish-brown, grey, or more rarely black.
Finish: Coarse sandy finish where not smoothed or slipped. Hard and fairly dense.
Forms: Wide-mouthed necked jar, neckless everted-rim jar/bowl, pie-dish, with chamfered base, dog-dish.
Decoration: Burnishing, burnished lattice, white slip with arcs, grooves.
Source: Local.
Suggested Date: Unsure – possibly the same date range as 9a or 3a, second to fourth century.
Occurrence: Rare.
Comments: Thin-sectioning has shown this fabric to be identical in all but colour to the grey and black sandies.

Fabric 22
Inclusions:
Quartz: Abundant opaque, white, transluscent and grey grains, largely 0.5mm in size or smaller, can reach 2mm. Not uniform and not evenly spaced.
Iron: Fairly common hard black sub-angular or rounded, sparse soft orange/red; generally less than 1mm.
Others: Common to sparse soft white calcite, 0.5mm or less.
Sparse minute flecks of mica.
Colour: Buff, brown-buff, pale orange and pink.
Finish: Extremely coarse and sandy. Abundant quartz visible on surface of pot.
Forms: Amphorae (globular Dressel 20).
Decoration: None.
Source: The Guadalquivir region of Spain, between Cordoba and Seville.
Suggested Date: Pre-Roman to the third/fourth centuries AD, though in Milton Keynes it appears to be largely second century.
Occurrence: Rare.

Fabric 23a
Description taken from Toller, Ph.D. thesis
Inclusions:
Quartz: Moderate fine clear and opaque (less than 0.25mm),
Iron: Sparse to abundant, mainly moderate, fine black iron ore; medium black iron ore (0.5–0.25mm) and fine to coarse red iron ore can occur rarely (over 0.5mm to under 0.25mm).
Others: Sparse or very sparse very fine mica. Fine white calcareous inclusions, rarely coarse, which are not often discernable at ×25 magnification.
Colour: Colour of the core ranges from pink to dark grey with most common occurrences of grey, pinkish grey and light reddish-brown. It can also

be light red and reddish yellow; with oxidised or reduced surfaces; if the surfaces are reduced, part of the core is also reduced, giving a red/grey/red or grey/red/grey sandwich.

Finish: It is visually fine with smooth fracture and hardness ranging from soft to very hard.

Forms: Imitations of imported fine wares. The one sherd almost certainly from Colchester found in Milton Keynes (from a topsoil layer F112 MK301) was part of a roughcast beaker, presumably a bag-shaped Form 391 or 392 (Hull 1963).

Decoration: As on imported fine wares - roughcasting, barbotine, rouletting and colour-coating. The latter is largely reduced; black, chocolate-brown, sometimes red. It is matt or has a slight gloss; a high metallic sheen is rare.

Suggested Date: Probably second century AD, although the Colchester kilns appear to have kept in production until the mid fourth century.

Occurrence: Very rare.

Fabric 23b

Description taken from Anderson 1980, 14–15.

Inclusions:

Quartz: When the fabric is well preserved the inclusions are not visible to the naked eye ×20 magnification shows sparse translucent and white opaque grains up to 0.5mm in size.

?Iron: Extremely sparse minute black and red-brown flecks.

Others: Not determinable.

Colour: White. The Milton Keynes example has a faint greenish-yellow tinge to the centre of the core.

Finish: Fine and hard, but adverse soil conditions may make it soft and rather powdery.

Forms: Beakers. The type found in Milton Keynes is a cornice-rimmed bag-shaped beaker (Anderson 1980, fig.7, 1).

Decoration: Colour-coating. This is usually black to red/brown and is invariably slightly glossy but can occasionally be matt. Roughcasting, barbotine and rouletting were used in conjunction with the colour-coat.

Source: Several sites in the Lower Rhineland?

Suggested Date: First and second centuries.

Occurrence: Very rare.

Fabric 23c

Inclusions:

Quartz: Moderate, uniform, very fine, 0.1mm occasionally reaching c. 0.25mm.

? *Iron:* Sparse minute orange and black flecks

Others: Rare minute off-white, yellowish inclusions.

Colour: The body colour is yellowish-white (very like Lower Nene Valley ware) colour-coated on the exterior face with a metallic black to dark brown slip. This has irregular orange-red patches. The interior is matt, and dark brown in colour.

Finish: Hard, smooth and dense.

Forms: Vases and beakers. The Milton Keynes example is a high-footed vase with a single or double handle (Fig. 13, 68).

Decoration: Slips, rouletting, moulded applique plaques.

Source: Central Gaul.

Suggested Date: The vessel was most probably made around the middle of the second century (Dr Kevin Greene, pers.comm.).

Occurrence: Very rare.

Comments: The base retains the faint impression of fingerprints in the slip.

Fabric 24

Fabric description taken from Young 1977.

Inclusions:

The ware is hard, sandy and frequently very micaceous. There are often small black and red inclusions and occasionally lumps of chalk up to 5mm long.

Colour: Buff-orange through red to a red-brown. There is often a grey core and this can vary considerably in thickness.

Finish: Hard and smooth. However, in cases where the slip has been eroded the underlying surface is often powdery and easily scratched.

Forms: (excluding mortaria)

C.1?	C.27	C.49	C.68	C.94
C.8	C.28	C.51	C.71	C.108
C.16	C.30	C.52	C.74?	C.109
C.18	C.44	C.54?	C.75	
C.20?	C.45	C.55?	C.77	
C.22	C.46	C.61	C.81	
C.23	C.47	C.64	C.93	

C.113–115 (rim sherds only)
C.118–119 (body sherds only)
W.C.3
?C.79 carinated body sherd decorated with dimples, rosettes and comb-stamping.
?C.83 straight-sided body sherd decorated with demi-rosettes and comb-stamping.
A variety of handles from flagons, jugs and/or narrow-necked jars.

Decoration: Colour-coating, which can vary from a reddish-orange shade through red to dark-brown; vessels with a white colour-coat are not so common. Decoration also includes cordoning, grooves, rouletting, paint, barbotine, dimples and stamping.

Source: Oxfordshire

Suggested Date: AD240/270 to 400+

Occurrence: Common.

Fabric 25/30

(thin-section analysis by Ms Rita Rattray)

Two of the thin-section groups were found to apply to fabric 25/30, these being groups 1 and 3, given below:

1. Soft, soapy fabric with smooth fracture. Sparse, fine, sub-angular quartz, (0.2m), sparse ferruginous sandstone, mica (muscovite), fine rounded black iron ore and iron staining in a well-sorted, abundant very fine sub-angular silt matrix (0.04–0.08mm).

3. Occasional/common medium/coarse sub-angular quartz (0.2–0.5mm), abundant muscovite mica, iron, occasional angular flint, organic matter in a very fine abundant sub-angular quartz matrix, and occasional glauconite. (This description also applies to fabrics 3k and 9f).

Initially fabrics 25 and 30 were treated as two separate fabrics, the latter being slightly sandier than the former. However, it proved difficult and time-consuming to determine, either by eye or binocular microscope, which of the two groups various sherds belonged to, and for this reason they were amalgamated.

Colour: Light grey or blue-grey surface with self-coloured or darker or lighter grey cores. Occasionally the surfaces may have pink, orange or yellowish tints due to underskins of such colours.
Finish: Soft, powdery, very dense, with well rounded fracture.
Forms: Butt-beaker, poppy-headed beakers/globular beakers, copies of Samian forms Dr 18, Dr 18/31, Dr 36/Curle 15; narrow-necked jar, wide-mouthed jar, lid-seated jar, small hemispherical dog-dish, small handled jug or flagon.
Decoration: Rouletting, barbotine self-coloured studs and lines, burnished latticing, incised vertical lines, incised arcs, grooves, cordons and slips. The latter are rarely found but this may be due to the easily eroded quality of the fabric. They are usually black.
Source: Unknown. Thin-section analysis suggests a local provenance for much of the material; it is however a very fine fabric and as those inclusions that do occur do not have a limited geological distribution it is possible that the pottery was produced else-where.
Suggested Date: Mid first to fourth century.
Occurrence: Moderate.

Fabric 28 a-d
This group has sub-divisions a, b, c and d. These divisions are largely based on the quantity of quartz within the fabric.

28a Quartz common.
28b Quartz common to abundant: fabric generally harder than 'a'.
28c Oxidised.
28d Quartz sparse to moderate, fabric generally softer and coarser in appearance.

Fabric description below, which applies to all four sub-divisions, is taken from a thin-section analysis by Ms Rita Rattray.

Inclusions:
Ill-sorted occasional medium sub-angular quartz largely white (0.54mm), organic matter, muscovite mica, sparse fine phosphate, rounded black iron ore, metamorphic quartz, sandstone, plagioclase feldspar and ironstone in a clay matrix.
Colour: Usually a greyware of various shades, though it does occur as an orange-coloured fabric – 28c. This is frequently unevenly fired and may have the occasional patch of grey. Cores are largely grey but can also be red or red-brown. White, black or grey slips were applied to some vessels.
Finish: This varies a great deal between a soft, dense, slightly powdery fabric and a hard, more open textured paste.
Forms: Wide-mouthed jars, flanged bowls, straight-sided dishes, triangular-rimmed bowls, globular jar, narrow-mouthed jar, jug?
Decoration: Slips, burnishing, grooves, finger-impressed frills, burnished scrolls and doodles.
Source: Probably local, as suggested by thin section analysis.
Suggested Date: Late second to fourth century.
Occurrence: Moderate.
Comments: There is occasionally some overlap in appearance between this fabric and Fabric 3.

Fabric 28/25
Thin-section analysis has shown that this minor sub-group contains the same inclusions as the soft greyware group 1 (page 85). By eye, however, the material bears a greater resemblance to Fabric 28.

Fabric 31
Fabric description taken from Lyne and Jefferies (1979.)

Before the mid third century the Alice Holt pottery is characterized by a considerable variety of fabrics, differing in the coarseness of sand filler used. As only one fabric, that of fabric A, (Lyne and Jeffries 1979,18) has been found within the Milton Keynes area to date, this one alone is described.

Fabric A
Inclusions:
Clay with sub-0.25mm grain quartz sand and the occasional pellet of grog.
Colour: Greyware, usually with a white, black or slate-grey slip.
Finish: Hard, dense and smooth.
Forms: Type 4–42: a vertical pointed bead-rimmed jar/storage vessel.
Class 3B : Everted-rim jar.
Decoration: Slip, burnishing combing.
Source: Alice Holt/Farnham on the Hampshire-Surrey border.
Suggested Date: c.270–420 AD.
Occurrence: Rare.
Comments: The sherds were kindly examined and identified by Mr Malcolm Lyne.

Fabric 32a
Inclusions:
Found in thin-section Group 10 (page 85).
Colour: Grey surfaces with yellowish-off white core; orange-pink surfaces with a buff core.
Finish: Gritty, dense and very hard. Obvious quartz inclusions.
Forms: Only two rims found to date - a cordoned narrow-necked jar, and a small fragment of what appears to be a wide-mouthed jar with everted rounded rim.
Decoration: Two sherds have remains of a slip or wash, dark grey in one case, a pale greyish off-white in the other.
Stabbed cordon.
Source: Fabric closely related to local sand-tempered wares.
Suggested Date: Fourth and possibly fifth century.
Occurrence: Very rare.
Comments: One rim is typical in form of an Alice Holt Class 1a–16 vessel, (Fig. 30, 25) but the fabric is not that of Alice Holt. Malcolm Lyne kindly agreed to examine this material and he commented that the pottery looks like the work of an Alice Holt trained potter using a different clay source.

Fabric 32b

Inclusions:

Found in thin-section Group 9 (page 85).

Colour: Very variedbuff and pale orange surfaces predominate but grey is also common. The latter tends to have the appearance of being a coating but it is in fact a surface produced by reduced firing.

Finish: Gritty, dense and very hard. Obvious quartz inclusions.

Forms: None yet found.

Decoration: One body sherd is decorated with a small cordon.

Source: Local.

Suggested Date: Second century.

Occurrence: Rare.

Comments: This sub-group resembles a locally made Medieval pot type. Examples have, however, been found in safely sealed contexts ie. Group 9 from MK211, Wymbush, dated late second to early third century.

Fabric 34a

Inclusions:

Quartz: Difficult to detect even with ×20 magnification. The grains appear to be sparse and white.

Iron: Sparse black shiny rounded 0.1–0.2mm, sparse black matt flecks and streaks.

Others: Yellow mica.

Colour: Fine brownish-buff throughout.

Finish: Softish, smooth and dense with a tendency to laminate.

Form: Jar or large beaker.

Decoration: Mica-dusting to give metallic effect, pressed-out bosses.

Source: Possibly continental (Gaul or the Rhineland), but need not be an import.

Suggested Date: Mid to late first century.

Occurrence: Rare.

Comments: These would have been beautiful and probably valuable vessels yet neither was found on sites of any apparent affluence (MK71 and MK307).

Fabric 34b:

Inclusions:

Quartz: Moderate, clear white, pinkish-brown grains, very varied in size, 0.1mm–1mm.

Iron: Moderate black hard rounded or subangular, slightly shiny 0.1–0.2mm. Sparse minute soft orange flecks.

Others: Sparse soft off-white rounded pellets, up to c.1.5mm. Sparse organic matter? which has fired out leaving thin blackened linear voids/streaks.

Yellow mica.

Colour: Dark buff surfaces with a light-grey core.

Finish: Hard, slightly sandy to the touch.

Forms: Platter with upward pointing flange; bowl? with rounded sides and rounded triangular rim.

Decoration: Mica-dusting.

Source: Unknown.

Suggested Date: Second century.

Occurrence: Rare.

Fabric 34c

Inclusions:

Quartz: Common, clear and white, fairly uniform in size 0.1–0.2mm, rarely reaching c.0.75mm.

Iron: Sparse soft orange up to c.0.5mm; very sparse rounded black; hard red-brown angular.

Others: Yellow mica.

Colour: Buff or very pale orange surfaces, light grey or orange core.

Finish: Brittle, hard and smooth.

Forms: Indented beakers.

Decoration: Mica-dusting, cordons.

Source: Unknown.

Suggested Date: Second century.

Occurrence: Rare.

Fabric 34d

Inclusions:

Quartz: Common, largely clear, occasionally grey, pink or white, generally c.0.1 – 0.5mm in size.

Iron: Sparse to moderate hard rounded and subangular black c.0.1 – 0.3mm. Sparse soft orange and red, up to c.0.6 – 60.8mm in size.

Others: Yellow mica.

Colour: Brownish-orange surfaces with a core that ranges from deep orange, pink to buff.

Finish: Fairly hard, dense, fine sandy; rounded fractures.

Forms: Wide-mouthed bowl with flange.

Decoration: Mica-dusting.

Source: Unknown.

Suggested Date: Second century.

Occurrence: Rare.

Fabric 35

The only sherd so far found in this fabric is in the finer oxidised ware. The description is taken from Young (1977 p.185).

Inclusions:

Sandy ware containing very little visible temper apart from occasional large white lumps (probably chalk).

Colour: The basic colour is orange but this can vary almost to red at one extreme to orange/cream at the other. Pots sometimes have a grey core.

Finish: The surfaces are smooth and the ware has been fired very hard.

Forms: The one form recognized to date in the Milton Keynes is a bag-beaker with a moulded out- turned rim – Type 020 (Young 1977a, 371)

Decoration: Burnished.

Source: Oxfordshire. Oxidised wares were produced only at the Group 3 Kiln sites.

Suggested Date: The fabric was made from the late first century onwards, but the 020 type found at Walton dates to the years 240–300 AD.

Occurrence: Extremely rare.

Comments: For a detailed discussion on this ware see Young (1977, 193–201).

Fabric 36

Inclusions:

Quartz: Common to abundant, white and clear, generally fine, less than 0.25mm, occasionally 0.25–0.5mm.

Iron: Sparse to common, black rounded and angular, up to 3mm.

Sparse, dark brown/reddish brown, rounded and

angular, up to 3mm.

Others: Rare, soft, white inclusions that do not react with acid.

Sparse mica.

Colour: Great variety of greys, buff, beige, brown and occasionally reddish or pink in the core.

Finish: Hard, but where there is no slip the surface can feel sandy, powdery and slightly soft.

Forms: Bowls (Class A14 cf Roberts 1982).

Decoration: Slipping (black), burnishing, bosses and dimples.

Source: The Hadham kilns, Hertfordshire.

Suggested Date: Fourth century.

Occurrence: Rare, but this may be partly due to the difficulty of recognizing plain body sherds.

Comments: This fabric is difficult to recognize without vessel form. For examples of late Hadham forms see Roberts (1982, BAR 4 106) on Romano-Saxon Pottery.

Fabric 37

Inclusions:

Quartz: Common to abundant, fairly uniform, fine (less than 0.25mm) white and clear.

Iron: Common to abundant, black rounded or sub-angular, less uniform in size than the quartz, 1mm and under.

Common, soft dark red and/or dark brown, up to c.3mm.

Others: Rare soft white inclusions that do not react with acid.

Sparse mica.

Colour: Deep orange, red-orange or dark red, very occasionally with a grey core.

Finish: Fairly hard. Where there is no slip the surface feels slightly sandy and powdery.

Forms: Bowls/jars, face-pot, flagons, mortaria, bottles.

Decoration: Slipping (orange, dark red-orange, white and cream,) burnishing, stabbing, bosses, frills, dimples.

The slipping and burnishing can be linear in appearance, occasionally streaked with darker bands.

Source: The Hadham kilns, Hertfordshire.

Suggested Date: The earliest Hadham material found in this area may be mid to late second century AD, but the majority is fourth century.

Occurrence: Moderate.

Comments: The possible Hadham material, dated mid to late second century by the rest of the stratified assemblage (pit group, MK297, Group 6) has been examined by Chris Going (report on the Hadham Kilns forthcoming) who was happy to accept these pieces as Hadham products, despite the early date.

Fabric 38

Inclusions:

Quartz: Moderate to abundant, very fine, fairly uniform in size, white and clear.

Iron: Rare to moderate red-brown and orange rounded inclusions, rare to common minute black flecks.

Others: Slightly micaceous.

Colour: Orange/buff fabric, commonly with a light or medium grey core. Enclosed vessels have grey inner faces (body sherds only). Traces of red-brown and occasionally black colour-coatings found, though one unusual example has a white slip.

Finish: A dense fabric which can vary from a fairly hard fine sandy ware to one that is soft and powdery.

Forms: Imitation samian forms are the most common – Dr 33 (one example has a moulded base), Dr 36/Curle 15, Dr 37, Dr 27; bowl with a slight bead rim and deep downturned flange, hemispherical bowl with double bead rim, bowl/jar with out-turned moulded rim.

Decoration: Colour-coating.

Grooves.

Source: Not known.

Suggested Date: Largely second but may continue into the third century.

Occurrence: Rare.

Comments: Can be difficult to determine from orange-coated Oxford ware.

Fabric 39

Inclusions:

Quartz: Abundant pink, clear and milky-white grains, 0.5mm – 1mm in size.

Iron: Common soft orange, hard brown, black streaks and flecks.

Others: Rare soft white inclusions.

Colour: Self-coloured pale pink; cream with pale pink-orange core and off-white central vein.

Finish: The surfaces of the sherds appear to have been sprinkled with fine quartz.

Forms: ? Jars, with out-turned moulded rims.

Decoration: Not known.

Source: Not known; possibly the Oxfordshire kilns.

Suggested Date: Not known, though if copying the Oxford material it is probably fourth century.

Occurrence: Very rare.

Fabric 40a

Inclusions:

Quartz: Abundant, minute, pink, grey clear and white, 0.1mm and under, fairly uniform but occasionally reaching c.1mm in size.

Iron: Common, soft orange/dark red generally under 0.5mm but with a number 1mm-3mm in size. Sparse black flecks.

Other: Sparse soft white inclusions, up to 4mm.

Colour: Cream, buff, pale pinkish-orange surfaces, may be a solid colour throughout or, more usually, have a bright orange core, although off-white and very pale grey cores do occur.

Finish: Hard and sandy.

Forms: Wide-mouthed necked jars/bowls; Dr 18/31, Dr 36 and Dr 38 copies, beaker, flanged bowl.

Decoration: Red-brown colour-coat or paint, incised lines.

Source: Unknown.

Suggested Date: Second to fourth centuries.

Occurrence: Rare.

Fabric 40b

Inclusions:

Quartz: Moderate to common, clear, white and grey, generally c.0.1mm reaching to c.3mm. (Less uniform than fabric 40A).

Iron: Moderate to common soft dark orange, up to 3mm but generally c.1mm in size; sparse to moderate black flecks and streaks.
Others: Very sparse soft white inclusions.
Colour: Cream or pale-orange with a dark orange core.
Finish: Hard and sandy.
Forms: Wide-mouthed necked jars/bowls; small neckless jar/bowl with upright rim; small jar/bowl with flared everted rim; Dr 18/31 and Dr 36 copies.
Decoration: Red-brown colour-coat or paint, burnishing.
Source: Unknown.
Suggested Date: Second to fourth centuries.
Occurrence: Rare.

Fabric 41a
Inclusions:
Quartz: Sparse, extremely fine 0.1mm and under, white.
Iron: Sparse, black flecks 0.1mm, sparse soft orange up to c.0.25mm.
Others: Sparse white angular and rounded inclusions up to c.0.25mm.
Colour: Dark reddish-orange throughout.
Finish: Extremely hard, smooth and dense.
Forms: Beakers/cups.
Decoration: Burnishing, grooves.
Source: Unknown.
Suggested Date: Possibly second century.
Occurrence: Very rare.
Comments: Extremely well-made.

Fabric 41b
Inclusions:
Quartz: Sparse to common white, grey and clear, largely c.0.2mm to 0.3mm but can occasionally reach c.1mm.
Iron: Common soft red/orange 0.5mm up to c.2mm, common to abundant black angular lumps and streaks, very varied in size.
Others: Sparse soft white inclusions, up to c.2mm. Slightly micaceous.
Colour: Dark pinkish-orange with a deeper orange or light brownish core, with some sherds showing traces of a thin watery dark brown colour-wash.
Finish: Hard, feels slightly sandy and has a tendency to laminate and flake.
Forms: Large beaker, shallow bowl with bead rim.
Decoration: Burnishing, rouletting, grooves, combed lattice and colour wash.
Source: Unknown - possibly Northamptonshire/The Upper Nene.
Suggested Date: Second century.
Occurrence: Rare.
Comments: Similar to fabric 17a, (see page 180).

Fabric 41c
Inclusions:
Quartz: Sparse minute white and clear, largely c.0.1mm, can reach c.1mm.
Iron: Moderate quantity of soft red inclusions, 0.5mm to 1mm, sparse black flecks.
Others: Sparse soft white rounded or sub-angular grains, generally under 1mm. Very slightly micaceous.
Colour: Pale orange to buff surfaces with a deep orange core.
Finish: Soft and powdery, dense.
Forms: Narrow-mouthed jar, body sherds of a flanged ? bowl.
Decoration: Unknown.
Source: Unknown.
Suggested Date: All sherds found so far came from the topsoil or upper layers at Stantonbury MK301 – possibly late .
Occurrence: Rare.
Comments: Very minor group.

Fabric 41d
Inclusions:
Quartz: Sparse to moderate, white and clear, generally minute but can reach c.0.5mm.
Iron: Fairly common soft red/orange, varies greatly in size from c.0.5mm to an exceptional 4mm. Sparse black flecks and streaks.
Others: Rare soft white inclusions.
Colour: Pale orange or buff with a self-coloured, pale grey or pinkish off-white core. Some sherds show traces of a thick red-brown colour-coat and two have remains of a black colour-coat.
Finish: Soft, smooth, powdery and dense.
Forms: Copies of a Dr. 31/18, a large Dr.33?, miniature Dr. 38's, flagons, beakers.
Decoration: Colour-coats on some pieces. Rouletting.
Source: Unknown.
Suggested Date: ? second to fourth century.
Occurrence: Rare.
Comments: The miniature Dr. 38's have been seen by Dr Chris ;Young who says that they are not Oxford C.109's (Young 1977, 174).
A rim sherd of a Dr.18/31 copy has the remains of a red-brown colour-coat which has formed a large 'lump' adhering beneath the bead; this suggests that the vessel may have been a 'second'.

Fabric 41e
Inclusions:
Quartz: Sparse to common milky white, white and clear, 0.1mm – 0.4mm.
Iron: Sparse soft red under 1mm, sparse black flecks.
Others: Rare soft white, under 1mm.
Colour: Medium orange or pale pinkish-orange with a deep orange core.
Finish: Fairly smooth, hardness varies a great deal. Tendency to laminate.
Forms: Copies of Dr 18/31 (with a hooked rim), Dr. 36, and possibly a Dr.38 and indented beakers, represented only by body sherds.
Decoration: One sherd has the remains of a red-brown colour coat.
Source: Unknown.
Suggested Date: ? second to fourth century.
Occurrence: Rare.

Fabric 41f
Inclusions:
Quartz: Very sparse, average size c.0.5mm greyish, clear and white.
Iron: Very common, red, orange, brown and black, ranging from c.0.2mm to c.3mm.

Others: Moderate quantity of soft white lumps, some of which have weathered out leaving the occasional hole, 0.5mm to 3–4mm.
Colour: Medium orange or pale orange surfaces with a deeper orange, pale blue-grey or dark grey core.
Finish: Very smooth and hard.
Forms: Wide-mouthed jar/bowl with triangular and plain slightly everted rims.
Decoration: One sherd has a red-brown colour coat. Grooves.
Source: Unknown.
Suggested Date: ? second to fourth century.
Occurrence: Rare.
Comments: Possibly related to fabric 2.

Fabric 41g
Inclusions:
Quartz: Abundant to common, largely clear or white, ranging from extremely fine under 0.1mm to c.0.5mm.
Iron: Sparse to moderate soft orange/red rounded or subangular 0.5mm to c.1mm, sparse black flecks.
Others: Rare white inclusions.
Colour: Pale orange or buff with a grey core. Occasionally the inner surface is also grey.
Finish: Fairly soft and dense, slightly powdery.
Forms: Unknown, body sherds only.
Decoration: Rouletting, colour-coating (one sherd has the remains of a dark brown colour-coat).
Source: Unknown.
Suggested Date: Second to fourth century.
Occurrence: Rare.
Comments: Minor group only, largely found in topsoil.

Fabric 41h
Inclusions:
Quartz: Abundant to common, clear and white, 0.25mm – 0.5mm.
Iron: Fairly common soft red 0.5mm – 2mm. moderate quantity grey/black streaks and flecks.
Others: Rare white inclusions.
Colour: Pale, medium to deep orange surfaces, self-coloured or grey cores, occasionally grey inner surfaces.
Finish: Sandy – varies considerably from hard to soft.
Forms: Small necked bowls or jars, flagons, bottles, beakers.
Decoration: Some vessels have white colour-coats.
Source: Unknown.
Suggested Date: ? second century.
Occurrence: Rare.
Comments: A small and varied group that covers a multitude of slightly differing orange sandy wares.

Fabric 41j
Inclusions:
Quartz: Sparse to moderate, milky-white and clear, not uniform in size, varying from c.0.1mm to c.2.00mm.
Iron: Moderate to abundant soft orange 0.5mm – 3–4mm, sparse black flecks.
Others: Common, white 0.5mm-2mm; pale pink/buff grog/clay? pellets 1–2mm.
Colour: Bright orange, medium orange, buff-orange; self-coloured or with pale grey, pinkish-grey core.
Finish: Coarse sandy, the 'grog', red iron grains and white flecks can be very conspicuous on the surfaces.
Forms: Triangular-rimmed jar/bowl.
Decorations: *Unknown.*
Suggested Date: Second to fourth century.
Occurrence: Rare.
Comments: Resembles fabric 2.

Fabric 41k
Inclusions:
Quartz: Sparse to moderate, milky white, clear, greyish and occasionally pink, generally about 0.5mm but can reach c.1.5mm.
Iron: Soft dark orange, sparse to common, c.0.5mm to 3mm in size, sparse black flecks.
Others: Sparse white flecks and rare white 'platelets', sparse grog/clay pellets 0.5mm – 5mm.
Colour: Pale or medium orange, self-coloured.
Finish: Fairly hard, coarse in appearance.
Forms: Body sherds only.
Decoration: Unknown.
Source: Unknown.
Suggested Date: ? Second to fourth century.
Occurrence: Rare.
Comments: Also possibly related to fabric 2.

Fabric 41m
Inclusions:
Quartz: Very sparse white, clear and greyish, average size c.0.5mm.
Iron: Sparse to common, red, orange and black.
Others: Slightly micaceous.
Colour: Pale or medium orange, self-coloured core.
Finish: Smooth, fairly hard. The fabric is very bland in appearance.
Forms: Cup-rimmed flagon/bottle; bottle with flared triangular rim.
Decoration: Not known.
Source: Unknown.
Suggested Date: Second to fourth century.
Occurrence: Rare.
Comments: May be related to fabric 41f.

Fabric 42
Inclusions:
Quartz: Abundant, ill-sorted, white, clear, grey, yellowish-brown and pink, c.0.1mm-0.7mm.
Iron: Sparse to moderate soft orange flecks, sparse minute hard black.
Others: Moderate soft white, calcareous 1mm-3mm. Very sparse – rounded flint pebble 3mm-4mm.
Colour: A single vessel shows great variations in surface colour, from light brownish buff through pale purplish-brown to black. Cores are as varied.
Finish: Hard, gritty, rough.
Forms: Small wide-mouthed jar, globular beaker.
Decoration: Grooves, finger-indentations.
Suggested Date: Second century.
Source: Local?
Occurrence: Very rare.

Fabric 43 ae.
Inclusions:
Quartz: Abundant clear and white, fairly uniform in size c.0.1mm – 0.2mm, rarely reaching c.1mm.

Iron: Sparse to moderate soft orange flecks sub -0.2mm.
Sparse, orange iron-stained 'lumps', which, when broken, prove to be the same type of inclusions as below.
Others: Sparse to common soft white/off-white/grey lumps, subangular and angular, up to c.3mm. Some react with acid (calcareous), others do not (clay pellets/grog?).
Colour: The most common surface colour is light brownish-buff or pinkish-buff, but it also occurs as dark purplish-brown and grey. Blackening, perhaps from cooking, often found on the exterior face. Cores are usually dark grey, occasionally buff.
Finish: Hard, fine sandy feel, with a coarse overall appearance. White and orange inclusions very visible on fresh breaks and unsmoothed surfaces.
Forms: Wide-mouthed everted-rim jars, lid-seated jars, narrow-necked jar/flagon rim, carinated bowl.
Decoration: Rilling, grooves and burnishing.
Suggested Date: Late first to second century.
Source: Probably local or Upper Nene Valley.
Occurrence: Moderate.

Fabric 43cb
Inclusions:
Quartz: Moderate to common, ill-sorted, largely clear, occasionally pale pink or light grey, 0.1mm – 0.5mm.
Iron: Sparse hard rounded black, common to abundant orange iron-stained lumps (as below). When split, the iron-staining is seen to cover the outer surfaces only.
Others: Common soft, white/off-white/grey lumps, subangular and angular, up to c.3mm-5mm. Some react with acid (calcareous) others do not (clay pellets/grog?).
Colour: Very light buff-brown, pale orange, grey or greyish white, the latter has the very brittle feel of overfired sherds. Grey or pale orange cores.
Finish: Hard and coarse.
Forms: Large wide-mouthed necked jar; wide-mouthed necked jar with slight lid-seating.
Decoration: Grooves.
Suggested Date: Second century.
Source: Probably local or Upper Nene Valley.
Occurrence: Rare.

Fabric 43d
Inclusions:
Quartz: Difficult to determine even with ×20 magnification.
Iron: Sparse, black, brown and orange flecks. Common orange iron-stained 'lumps' (as below) soft, rounded and subangular, up to c.3mm.
Others: Common soft white/off-white/grey, rounded and subangular, up to c.3mm. Some react with acid (calcareous) others do not (clay pellets/grog?).
Colour: Largely light-buff brown, occasionally blackened on the outer face and over the rim.
Finish: Fairly soft, smooth to the touch, but coarse in appearance due to the orange and white inclusions showing through to the surface.
Forms: Wide-mouthed necked jar with lid-seating.
Decoration: Grooves.
Suggested Date: Second century.
Source: Probably local or Upper Nene Valley.
Occurrence: Rare.

Fabric 43f
Inclusions:
Quartz: Abundant clear and white, 0.1mm 0.2mm.
Iron: Sparse soft orange flecks, rarely reaching c.2mm, sparse hard black minute grains.
Others: Sparse, soft, white/off-white/grey lumps, up to c.3mm in size. Some react with acid (calcareous) others do not (clay pellets/grog?).
Colour: Pinkish-buff, pale brownish-buff surfaces with a dark grey or buff core. Frequently blackened on the outer face and over rim.
Finish: Hard, compact, fine sandy feel.
Forms: Wide-mouthed jars, lid-seated jars, lids, bead-rimmed straight-sided dish, reeded rim bowl.
Decoration: Grooves, burnished arcs, cordons.
Suggested Date: Second century.
Source: Probably local or Upper Nene Valley.
Occurrence: Moderate.

Fabric 43g
Inclusions:
Quartz: Abundant, clear and white, 0.1mm-.2mm.
Iron: Sparse soft orange up to c.2mm, sparse minute rounded black, occasionally reddish-brown, up to c.0.5mm.
Others: Sparse to moderate soft, rounded white/off-white, up to c.3mm in size; do not react with acid.
Very sparse soft subangular and angular dark grey grog/clay? pellets up to 5mm long.
Colour: Pinkish-buff, very pale buff, off-white surfaces, occasionally blackened on the outer face. Core self-coloured or pale grey.
Finish: Hard, fine, compact, sandy feel.
Forms: A platter or lid? wide-mouthed everted rim jar.
Decoration: -
Suggested Date: Late first to second century.
Source: Probably local or Upper Nene Valley.
Occurrence: Rare.
Comments: This fabric sub-division could be included within the pink-white fabric 18, but the inclusions suggested a closer relationship to fabric 43.

Fabric 44
Inclusions:
Quartz: Sparse, to common, minute, largely white, occasionally clear, 0.1mm and under, though can reach up to c.0.5mm.
Iron: Sparse soft red/orange c.1.5mm and under. Sparse hard angular reddish-brown up to c.2mm. Sparse hard rounded glossy black 0.5mm and under. Moderate to abundant minute black flecks.
Other: Sparse to common hard white/grey minute calcareous inclusions, can occasionally reach up to c.3mm. Slightly micaceous.
Colour: Orange-brown or pale brownish-orange surfaces, with a black or grey core. The body sherd is partially blackened by burning.
Finish: Fairly soft, smooth, easily fractured. Wheelmade.

Forms: Straight-sided bowl.
Decoration: The bowl has incised vertical lines inscribed on the wall. By analogy to similar vessels at Rushden (Woods and Hastings 1984, 17) these lines seem to correspond to the position of the feet.
The body sherd (not illustrated) has linear burnishing marks into which incised decoration consisting of V's drawn with a three-pronged tool have been cut. The prongs appear to have been flat-ended.
Source: Unknown – possibly related to the Rushden material.
Suggested Date: First century.
Occurrence: Extremely rare.

Fabric 45
Inclusions:
Fossil shell and limestone pieces:
Common, mostly 1mm-2mm in size but can reach 6mm-7mm.
Grog/clay pellets:
Common, black, grey, buff, off-white or pale orange, 1mm–2mm in size.
Quartz: Sparse clear and white, not visible to the naked eye.
Iron: Sparse red/brown oxides, sparse black haematite.
Colour: Grey cored with reddish-orange, orange, pale orange or, less frequently, drab grey surfaces. The inclusions show clearly. Some sherds are fire blackened.
Finish: Smooth – can be thin and hard or thick with irregular surfaces.
Forms: Necked bowls or jars B1–1/D-1, rimless handmade jars C3, lid-seated jars (both wheel and handmade) C5–1 and C5–2. Wide-mouthed bowl with thickened inbent lip G2–3 or high carinated lid L3. Handmade.
Rounded wide shallow bowl with flanged rim. Handmade G2–3. Handmade copy of a biconical carinated bowl with everted rim. Finished on a wheel. Cam.241 (Type numbers refer to Thompson 1982 and Hawkes and Hull 1947).
Decoration: Rilling, slashed rims, cordons, and grooves.
Source: Local.
Suggested Date: ?Mid to late first century.
Occurrence: Rare.

Fabric 46a
Inclusions:
Grog: Abundant pieces of crushed pottery, black, dark grey, occasionally light grey and clearly visible to the naked eye.
Quartz: Sparse very fine grains, white or clear, generally only visible under a microscope.
Iron: Common/sparse soft iron-oxide, again difficult to see without a microscope.
Others: Sparse fossil shell/limestone pieces. Other minerals are also likely to be present but in such small quantities that they become apparent only after thin-sectioning (Thompson 1982, 20).
Colour: Red-orange, orange-brown, black, dark brown or grey surfaces with light or dark grey cores. The orange surfaced vessels are common in the Milton Keynes area, Zone 8, Bletchley to Northampton. (Thompson 1982,22).
Finish: Varies from a soft and lumpy paste to a hard fairly fine well fired ware (Waugh *et al* 1974, 374). Generally wheelmade but handmade examples do occur.
Forms: Plain pedestal urns with ordinary foot (A1).
Stunted pedestals (A6).
Plain everted jars or bowls: rims only (B1–1/D1–1).
Tall plain everted rim jars with offset neck (B1–2).
Plain everted jars with groove around widest part of body (B1–5).
Everted rim jars with rippled shoulders (B2–1). Round jars/bowls? with rippled or corrugated neck (B2–4).
Tall narrow cordoned rims (B3–2).
Plain jars with no true external rim (C3).
Lid-seated jars, plain (C5–1).
Lid-seated jars with slashed rim (C5–2).
Storage jars (C6–1).
Bowls with offset neck, often one cordon and a girth groove (D1–3).
Wide-mouthed everted rim bowl with bulges between cordons on shoulder (D2–1?).
Round bowls with rippled shoulder (D2–4).
Elaborate lidded bowls or barrels (D3–4).
Simple carinated cups with one cordon and constricted waist (E1–1).
Carinated wide-mouthed cups with multiple cordons (E1–2).
Small carinated cups, cordoned, unconstricted wall above carination (E1–3).
Plain carinated cups (E1–4).
Squat wide-mouthed cups, still related to carinated cups (E2–1).
Squat wide-mouthed cups, rounded profile, cordoned and/or corrugated body (E2–2).
Plain wide-mouthed everted-rim cups, usually one shoulder cordon (E3–1).
Plain everted rim cup with exaggerated neck above offset (E3–2).
Cups with tall elaborately cordoned neck (E3–7).
Straight-walled platters copying the Gallo-Belgic form Cam.1 (G1–1).
Copy of Gallo-Belgic forms Cam.7 and 8, compact dishes with deep offset vertical wall and internal moulding (G1–6).
Copies of Gallo-Belgic form Cam.12 with straight or convex outsplayed wall and one internal offset (G1–7).
Copies Gallo-Belgic form Cam.14 outsplayed wall with high offset (G1–9).
Native platter with slightly moulded wall (G1–12).
Shallow wide-mouthed bowls, plain (G2–2).
Rounded wide shallow bowl with flanged rim (G2–3).
Girth beakers (G4).
Decorated barrel-shaped butt beakers (G5–2).
Plain butt-beakers with offset neck (G5–4).
Butt-beaker rims and fragments (G5–6).
Lids with grooved and cordoned vertical rims (L5).
(Bracketed figures refer to Thompson 1982).
Decoration: Incised lines, burnishing, slashed rims, cordons and grooves.
Source: Local.
Suggested Date: First century.

Occurrence: Very common.

Fabric 46da

Inclusions:

Quartz: Common to sparse fine white/clear quartz grains, largely invisible to the naked eye, some reaching 0.25mm in size.

Shell: Common to sparse, up to c.2mm, may be indicated by voids on the surface.

Grog/Clay pellets: Dark or light grey rounded/subangular grains. Some of these prove to be hard, others soft. Sparse.

Iron: Sparse hard brown, soft dark red flecks, sparse black haematite.

Others: Occasional grass/straw impressions.

Colour: Black, dark brown, buff-coloured surfaces; the core is always black.

Finish: Thick and lumpy to fairly thin and fine. Hardness also varies a great deal. Wheel and handmade examples.

Forms: Lid-seated jar (C5)
Flask or cup (E3–5)
Shallow wide-mouthed bowl (G2–2)
(Bracketed figures refer to Thompson 1982)

Decoration: Impressed finger marks on rim.

Source: Local.

Suggested Date: ?Early to mid first century.

Occurrence: Rare.

Fabric 46g

Inclusions:

Quartz: Abundant to common, generally clear or white, largely under 0.25mm but can reach 1mm–2mm.

Iron: Common soft red, hard brown or black (the latter is sparse.
Grog/Clay pellets: Common, 1mm–3mm in size, dark to light grey.

Others: Pale orange/buff/off-white/cream inclusions, rounded or angular, can reach 2mm–3mm. Do not react with acid.
Sparse fossil shell, limestone flecks and 'voids'. The surface of a small number of sherds also bear the imprints of burnt-out grass or straw.

Colour: Buff, dark or pale orange surfaces; the core is usually grey but can also be buff or pale orange.

Finish: Sandy, 'lumpy' and hard.

Forms: Storage jars (C 6–1).
Plain conical lids, no differentiated rim (L6).

Decoration: Not enough recovered to establish this clearly; the lid has rilled decoration.

Source: Local – Caldecotte area. Some of the sherds from Kiln II, in fabric 47k are similar to 46g.

Suggested Date: First to mid second century.

Occurrence: Rare.

Fabric 46j

Inclusions:

Unidentified: Sparse to common soft buff/off-white/cream round and angular grains, up to 4mm in size. Do not react with acid.

Quartz: Sparse white and clear, not generally visible to the naked eye.

Iron: Common, soft orange, hard brown or black flecks, can reach up to 3mm-4mm.

Grog/Clay pellets: Sparse dark and light grey, rounded, up to 1mm–2mm.

Others: Sparse lumps of fossil shell or limestone, 5mm or under.

Colour: Dark orange, brownish-orange, pale orange or pinkish-buff surfaces; core may be self-coloured or grey.

Finish: 'Lumpy', not gritty.

Forms: Storage jars (C6–1).

Decoration: Not enough examples available.

Source: Local – Caldecotte area.

Suggested Date: Late to early mid second century?.

Occurrence: Rare.

Fabric 46k

Inclusions:

Grog/Clay pellets: Abundant to common grey/black and buff/off-white particles, rounded and subangular, 2mm in size or less.

Quartz: Common clear, white, largely under 0.25mm but can reach 1mm-2mm.

Iron: Common, hard brown oxide, sparse soft orange oxide and sparse black haematite.

Others: Sparse fossil shell and limestone flecks.

Colours: Grey cored with a tendency for dark orange-brown or brownish-grey surfaces, can be patchy. The grog/clay pellets may show clearly on the surface, giving a speckled appearance.

Finish: Gritty, can be hard or soft.

Forms: Bowls with offset neck, often one cordon and a girth groove (D1–3), small true flasks with high narrow neck (E3–6), lid seated jars, plain (C5–1), storage jars (C6–1), cup/small bowl with everted rim, miniature bowl or cup.
(Bracketed figures refer to Thompson 1982)

Decoration: Incised lines, cordons and grooves.

Source: Local – Caldecotte area.

Suggested Date: ? Mid first to early second century.

Occurrence: Moderate.

Comments: Resembles fabric 47dg but is more heavily grogged.

Fabric 46m

Inclusions:

Grog/Clay pellets: Common dark or light grey particles, fairly uniform in size, largely c.0.5mm.

Quartz: Fairly common, white or clear. Thin sectioning shows a range of grain size, fine to medium predominating (0.25mm and below, 0.25mm – 0.5mm respectively). Coarse grains (0.5mm and above) are not so common.

Iron: Common to sparse soft red, hard brown and black flecks, not visible to the naked eye.

Others: Abundant off-white/cream/buff inclusions, rounded or angular, c.0.25mm – 0.5mm, with sparse grains reaching 2–3mm. These do not react with acid. Sparse fossil shell with an occasional fine limestone fragment.

Colour: Light red, pale orange, buff. The core is either self-coloured or more usually grey.

Finish: Can be smooth and highly burnished; unburnished areas feel slightly gritty.

Forms: Plain pedestal urns with ordinary foot (A1).
Plain everted-rim jars or bowls: rims only (B1–1/D1–1).
Tall jars with shoulder cordons, not narrow rims (B3–6).
Tall barrel-jars with bead rims and cordons on upper body (B5–3?).
Grooved globular barrel jars (B5–5).
Lid-seated jars with slashed rim (C5–2).

Bowls with offset neck and often one cordon (D1–1).
As D1–1 with a girth groove (D1–3).
Wide-mouthed bowls (D1–4).
Carinated cup with cordon constricting waist or plain carinated cup (E1–1/E1–4).
Small carinated cups, cordoned, unconstricted wall above carination (E1–3).
Cups with tall elaborately cordoned neck (E3–7).
Straight walled platters copying the Gallo-Belgic form Cam.1 (G1–1).
G1–1 with a bead rim (G1–3).
Copies of Gallo-Belgic forms Cam.12 with straight or convex outsplayed wall and one internal offset (G1–7).
Shallow wide-mouthed bowls (G2–2).
Copies of Gallo-Belgic and Roman carinated cup forms (G3–2).
Plain barrel-shaped butt-beakers (G5–1).
Decorated barrel-shaped butt beakers (G5–2).
Miniature butt-beakers (G5–3).
Butt-beaker rims and fragments (G5–6).
(Bracketed figures refer to Thompson 1982)

Decoration: Incised lines, burnishing, cordons and grooves which appear to have been formed by the use of a template.

Source: Local (Caldecotte Kiln 1, see page 95).

Suggested Date: Early post-conquest/c.AD.50 (Thompson 1982,160).

Occurrence: Small quantity found in other features at Caldecotte; rare elsewhere.

Fabric 46n

Inclusions:

Grog/Clay pellets: Common, generally 1mm–2mm in size, light grey, rounded and subangular.

Quartz: Rare, variable in size, fine 0.25mm or under, to 2mm–3mm.

Iron: Common, variable in size, very fine to coarse brown/red oxides, sparse black fine haematite.

Others: Fossil shell or limestone 'flecks', 1mm or under.

Colour: Pale grey; the core a lighter or darker grey.

Finish: Lumpy and soft, occasionally slightly gritty, powdery.

Forms: Tall everted rim jar with offset neck (related to B1–2?).
Tall necked narrowmouthed jars, cordoned and often angled on the shoulder (B3–8?).
Copies of Gallo-Belgic form Cam.14, outsplayed wall with high offset. (G1–9).
(bracketed figures refer to Thompson 1982)

Decorations: Cordons and grooves.

Source: Local.

Suggested Date: ? mid first to early second century.

Occurrence: Rare – minor group only.

Fabric 46p

Inclusions:

Unidentified: Common to abundant, soft, buff/offwhite/cream, rounded and angular, c.0.25mm–0.5mm to 2–3mm in size. These do not react with acid.

Grog/Clay pellets: Occasional dark grey flecks.

Quartz: Sparse clear or white fine grains, not readily visible to the naked eye.

Iron: Sparse soft red, hard brown oxides and sparse fine black haematite.

Others: Sparse to common fossil shell flecks.

Colour: Most commonly grey cored with a red 'underskin' and black surfaces. Also various shades of grey and occasionally orange. The outer surface chips or flakes relatively easily, leaving the differently coloured underskin exposed in patches.

Finish: Smooth where not chipped; fairly fine, thin and hard.

Forms: Plain everted-rim necked jars or bowls (B1–1/D1–1)
Round cordoned jar with short wide neck (B3–4)
Tall-necked narrow-mouthed jars, cordoned and often angled on the shoulder (B3–8)?
Lid-seated jars, plain (C5–1)
Bowl with offset/cordoned neck and girth grooves (D1–3)
Squat wide-mouthed cups, still related to carinated cups (E2–1)
Squat wide-mouthed cups, rounded profile, cordoned and/or corrugated body (E2–2)
Plain wide-mouthed evertedrim cups, usually with one shoulder cordon (E3–1)
As E3–1 with girth-groove (E3–3)
Small true flasks with high narrow neck (E3–6)
Straight walled platter copying the Gallo-Belgic form Cam. 1 (G1–1)
Copy of GalloBelgic form Cam 4 or 5, splayed wall with overhanging rim and one or two internal mouldings (G1–4/5)?
Copies of Gallo-Belgic form Cam.12 with straight or convex out-splayed wall and one internal offset (G1–7)
Shallow-wide mouthed bowls, plain (G2–2?)
Girth-beakers (G4)
Miniature butt-beakers (G5–3)
High bell-shaped lids, rims not turned out (L2)
Conical lids, out-turned rim (L8?)
Neckless bowls with everted rims, possibly related to Cam. 224
Globular or ovoid beakers with everted rim and stabbed decoration; Cam. 108
Globular beaker with everted rim and markedly offset shoulder with stabs (Cam. 109)

Decoration: Burnishing, cordons and grooves, stabbing, incised lines.

Source: Local – Caldecotte area.

Suggested Date: Mid first to mid second century?.

Occurrence: Moderate.

Fabric 46qr

Inclusions:

Quartz: Common, clear and white, fairly fine 0.25mm and below, occasionally reaching c.05mm.

Grog/Clay pellets: Sparse to common, dark grey.

Iron: Common soft red and hard brown oxides, sparse black haematite.

Others: Sparse to common soft, buff/off-white/cream,rounded and angular inclusions, c.0.25mm0.5mm to 2–3mm in size. Do not react with acid.
Fossil shell and limestone flecks, sparse to common.

Colour: Most commonly grey cored with a red 'underskin' and black surfaces (occasionally the black surface is on the outer face only).

Finish: Fine sandy feel except where smoothed or burnished; hard.
Forms: Plain everted-rim jars or bowls (B1–1/D1–1)
Tall-necked narrow-mouthed jars, cordoned and often angled on the shoulder (B3–8)
Lid-seated jars, plain (C5–1)
Bowl with offset neck, often one cordon and a girth groove (D1–3)
Plain wide-mouthed everted rim cups/small bowls, usually one shoulder cordon (E3–1?)
Small true flasks with high narrow neck (E3–6)
Copies Gallo-Belgic form Cam.12 with straight or convex outsplayed wall and one internal offset (G1–7)
Shallow wide-mouthed bowls (G2–2?).
Decoration: Cordons, grooves, burnishing.
Source: Local – Caldecotte area.
Suggested Date: Late first to mid second century?
Occurrence: Moderate.
Comments: Possibly a passage fabric between 46p and 9xy.

Fabric 47a
Inclusions:
Found largely in thin-section Group 7 (page 85).
Colour: The dominant colouring is blue-grey with a paler blue-grey core. Occasionally this may have orange margins. On a small number of vessels, areas have fired a patchy or streaky orange, giving the impression of an eroded slip or wash.
White slips are fairly common, black is less so.
Finish: Hard sandy finish, not as dense as Fabric 3.
Forms: Widemouthed necked jars and bowls with everted rounded rims. Narrow-mouthed flasks, as in Cam. 231/233/234.
Lid-seated jars/bowls.
Lids.
Globular or ovoid beakers.
Straight-sided dogdish and bowl, with chamfered base.
Pie-dishes.
Deep ?carinated bowl (one only).
Copies of Gallo-Belgic platters ie as in Cam. 28 (GB 14).
Copy of a butt-beaker, Cam. 112A (one only).
Cistern-type vessel (one only).
Wide-mouthed necked with grooved rim (one only).
Pedestal base (one only).
Decoration: Burnishing, burnished latticing, slips, lines lightly scored in to the slip, cordons and grooves, barbotine dots (rare).
Source: Local. Kiln II (or related kilns) is a likely source.
Suggested Date: Late first to second century.
Occurrence: Common.
Comments: Closely related to fabrics 3, 9, 19/29 and 32. Due to this similarity certain sherds fit both the fabric 47 and 3 categories. There is also overlap between the subgroups of 47.

Fabric 47ab
Inclusions:
Found largely in thin-section Group 8, with a smaller quantity in Group 14.
Colour: As 47a. A speckled surface is also common due to the quantity of grog/clay pellets within the fabric.
Finish: Coarse, sandy feel except where burnished. The texture is fairly open.
Forms: Wide-mouthed necked jars/bowls, with everted rounded rims.
Narrow-mouthed flasks, as in Camulodunum 231/233/234.
Lid-seated jars/bowls, lid/shallow bowl, globular or ovoid beaker, globular or ovoid beaker as in Cam.108.
Decoration: Burnishing, cordons and grooves, stabbing
Source: Local. Kiln II (or related kilns) is a likely source.
Suggested Date: Late first to second century.
Occurrence: Common.
Comments: Overlaps with 47a and 47c.

Fabric 47c
Inclusions:
Found largely in thin-section Groups 6, 8 and 9.
Colour: Various shades of grey, occasionally with an orange surface or orange-brown bloom. Cores are grey.
Finish: Fairly coarse with an open texture.
Forms: Wide-mouthed necked jars/bowls with everted rounded rims. Narrow-mouthed flasks as in Cam. 231/233/234.
Narrow-mouthed ?jars, lid-seated jar/bowl, lids, shallow bowls; Platters, – copying Gallo-Belgic forms ie. GBI/Cam.21; GB7–8/Cam.24; GB14/Cam.28; Cam. 44 type bowl with hollowed rim.
Copy of a Gallo-Belgic girth beaker ie. as Cam.85, globular or ovoid beakers as Cam. 108, ? Dogdish.
Decoration: Cordons and grooves, incised lines, stabbing.
Source: Local – the fabric is very similar to that produced at Kiln II.
Suggested Date: Late first to second century.
Occurrence: Common.
Comments: There is considerable overlap between this and other fabric 47 sub-groups. This particular sub-group also resembles the grey fabric 46n.

Fabric 47 d/g
Inclusions:
Found largely in thin-section Groups 8 and 14.
Colour: Various shades of grey, a yellowish-grey being most common. Occasionally one or both surfaces has fired a patchy brownish-orange, or (very occasionally) black. The cores are largely grey but can also range in colour from buff and reddish-brown to black.
Finish: Sandy and coarse; hardness varies. Generally unsmoothed, with quartz grains frequently visible on the surfaces.
Forms: Wide-mouthed necked jars/bowls, with everted rounded rims, lid-seated jars, lids, shallow bowls (one with faint reeded rim)
Cam. 44 type bowl/dish with hollowed rim
Globular or ovoid beakers (one example as in Cam.108). Large jug, Cam. 165.
Hemispherical bowl with double cordon under the rim, related to Cam. 48.
? Bowl as in Cam. 246A (not grooved).
Grooved dogdish, pie dish.
Decoration: Cordons and grooves, stabbing.

Source: Local – possibly Caldecotte Kiln II, or related kilns.
Suggested Date: Late first to second century.
Occurrence: Common.
Comments: This sub-group closely resembles the coarser examples of fabrics 9 and 3, whilst the orange or brownish sherds have similarities with fabric 19/29 and 47 j.

Fabric 47 j
Inclusions:
Found largely in thin-section groups 13 and 14.
Colour: Surfaces are generally a light buff-brown, brownish-orange or buff with grey, or occasionally black, cores.
Finish: Gritty, sandy surfaces, rarely smoothed. Fairly hard and dense in texture.
Forms: Wide-mouthed necked jars/bowls with everted rounded rim, lid-seated jars/bowls, large beaker type vessels, piedish – rounded sides, bowl with hollow rim, similar to Cam. 47B, neck of a small flask related to Cam. 233?, lid L7.
Decoration: Cordons and grooves, one sherd has a white slip over the outer surface.
Source: Local – possibly related to the Caldecotte Kiln II material.
Suggested Date: Largely second century, but possibly also late first. Occurs in Group 1 where it may be residual.
Occurrence: Rare.
Comments: A fairly dense, sandy fabric which resembles 47d/g in many ways. It also has a number of affinities with fabric 2m, especially when clay pellets or grog are present in quantity.

Fabric 47k
Inclusions:
Found largely in thin-section group 8.
Colour: Various shades of orange, occasionally buff, with a self-coloured or grey core.
Finish: Coarse sandy, rarely smoothed. Hardness variable; light open texture.
Forms: Wide-mouthed jars/bowls with rounded everted rims or rolled rims, storage jars, lid-seated jars/bowls, lid-seated beaker, flask, as in Cam.231B, wide-mouthed shallow bowls, possibly related in type to Cam. 246A, lid, wide-mouthed jar with grooved rim.
Decoration: Cordons and grooves, incised wavy lines. One sherd has the remains of a white slip on the inner face.
Source: Local – Caldecotte Kiln II or related kilns.
Suggested Date: Late first to second century
Occurrence: Rare.
Comments: This fabric is a much lighter, less dense 46g and it also bears a resemblance to fabric 2b.

APPENDIX 2

PERCENTAGES OF FABRICS IN EACH GROUP

Note

The following fabrics were not represented in the Groups: 5, Oxford Parchment Ware; 16, Northampton Painted Ware; 21, Spanish Samian; 26, Terra Nigra; 27, Terra Rubra; 35, Oxford Oxidised Ware; 39, Gritted Whiteware; 42, Local Sandy Ware; 44, First Century Fine Ware.

Tables 1 and 2 detail the percentages - and therefore possibly the beginnings, ?ends and fluctuations in production or demand of the various fabrics described within this report.
Within these tables the following abbreviations are used, in brackets:
NR Not Residual, R Residual, C Contamination, *largely from one vessel only.

TABLE 1:

SITE/FEATURE	GROUP NO.	DATE (APPROX)	NO OF SHERDS	FABRIC 1: Shell-tempered ware	FABRIC 2: Soft pink grogged ware	FABRIC 3,9,47, etc: Local sand-tempered wares	FABRIC 4a: White Oxford mortaria	FABRIC 4b/4ba: Orange Oxford mortaria	FABRIC 4e etc: probably Northants/Beds/Bucks	FABRIC 4h: Orange Hadham mortaria	FABRIC 4f:Lower Nere Valley mortaria	FABRIC 6: Lower Nene Valley Colour Coated ware	FABRIC 7: 'Renish Ware'	FABRIC 8: Black-burnished ware I	FABRIC 10: Saxon	FABRIC 12: Lower Nene Valley Greyware	FABRIC 13: Lead-glazed wares	FABRIC 14:?Upper Nene Valley/ Northants Greyware	FABRIC 15: 'London-ware' Copies/ micaceous reduced ware	Fabric 17: ?Northants/Upper Nene Valley Oxidised Ware
MK36 Walton	1	Early to mid first	226	1.8	0	1.8	0	0	0	0	0	0	0	0	0	0	0	0	0	0
MK71 Cotton Valley	2	Mid to late first	475	34.7	0	7.2	0	0	0	0	0	0	0	0	0	0	0	3	0	0
MK345 near Bancroft	3	Late first to early second	831	44.4	0	26.1	0.1	0	1.2	0	0	0	0	0	0	0	0	1.8	0	0
MK307 Loughton	4	Late first to mid second	511	38.7	0	27.8	0	0	0	0	0	0	0	0	0	0	0.6	0.8	0	0.4
MK44 F92 Caldecotte	5	Early to third quarter second	384	40.1	1.82	25.0	0.3	0	0	0	0	0.3	0	0	0	0	0	0	0	0.3
MK297 F31 Woughton	6	Mid to late second	847	42.9	7.3	14.9	1.8	0	0.7	0	0	2.6	0	0	0	1.4	0	3.1	1.2	2.2
MK313 near Woughton	7	Late second	195	43.1	8.7	26.7	1.1	0	0	0	0	1.5	1.0	1.1	0	3.1	0	0	0	0
MK297 F24 Woughton	8	?V.late second	93	20.4	16.1	10.7	3.2	0	0	0	0	4.3	0	1.1	0	1.1	0	0	0	3.2
MK211/84 Wymbush	9	Late second to early third	126	15.9	32.5	16.7	0	0	0	0	0	0	4.8	4.0	0	12.7	0	9.5	0	0
MK269 Willen	10	Late second to mid third	120	15.8	11.7	24.1	0.8	0	0	0	0	12.5 *	0	1.7	3.3 (C)	0	0	6.7	0	0
MK211/44-52 Wymbush	11	?Mid to late third	194	1.5	58.2	23.2	0	0	0	0	0	0	0	0	0	0	0	0	0 (R)?	0.5
MK211/66 Wymbush	12	Late third	175	25.7	35.4	33.1	0	0	0	0	0	0	0	0.6	0	0	0	0.6 (R)	0	0.6 (R)?
MK211/57-58 Wymbush	13	Early to mid fourth	133	26.3	15.0	18.8	0	0.7	0	0	0	4.5	0.7 (R)	0.7	0	1.5 (R)	0	0	0	2.2 (R)?
MK211/42 Wymbush	14	Mid fourth	183	36.1	18.6	9.3	0	1.6	0.5 (NR)	0	0	2.7	0	0	0	0	0	0	0	0
MK105G Bancroft	15	Mid to late fourth	46	41.3	4.3	4.3	2.2	2.2	0	0	0	10.9	0	0	0	0	0	0	0	0
MK354 Caldecotte	16	Mid to late fourth	69	31.9	10.1	14.5	2.9	2.9	0	0	0	11.6	0	0	1.4	1.4 (R)	0	0	0	0
MK105 E Bancroft	17	?late fourth to early fifth	147	22.4	12.9	12.2	0	0	0	0.7	0.7	5.4	0	0.7	9.5	0	0	2.0 (R)	0	0

TABLE 2:

SITE/FEATURE	GROUP NO.	DATE (APPROX)	NO OF SHERDS	FABRIC 18: White and pink wares	FABRIC :20: Samian	FABRIC 22:Amphorae (Spanish Dressel 20)	FABRIC 23: (a) Colchester (b) Lower Rhineland? (c) Central Gaul Black-slipped ware	FABRIC 24: Oxford red-and-brown colour-coated ware	FABRIC 25/30: Soft greywares	FABRIC 28: Greyware with conspicous white quartz	FABRIC 31: Alice Holt/Farnham ware	FABRIC 34: Mica-dusted wares	FABRIC 36: Hadham 'grey' ware	FABRIC 37: Hadam orange ware	FABRIC 38: Orange-buff	FABRIC 40: Cream/orange ware	FABRIC 41: Orange wares (mixed fabrics)	FABRIC 43: Second Century Sandy	FABRIC 45: Shell and grogg	Fabric 46: 'Belgic grogged' and later sub groups
MK36 Walton	1	Early to mid first	226	0	0	0	0	0	0	0	0	0	0	1.32 (R)	0	0	0	0	0	95.1
MK71 Cotton Valley	2	Mid to late first	475	1.9	0	0	0	0	0	0	0	12.6 *	0	0	0	0	0	3.4	0	40.2
MK345 near Bancroft	3	Late first to early second	831	1.3	0.7	0	0	0	0	0	0	0	0	0	0	0	0	7.1	5.0	12.1
MK307 Loughton	4	Late first to mid second	511	3.9	0.2	0	0	0	0	0	0	0.6	0	0	2.1	0	0	0.6	4.5	19.8
MK44 F92 Caldecotte	5	Early to third quarter second	384	10.2	3.4	0	0	0	1.8	0	0	1.8	0	0	2.1	2.3	2.1	0.3	0	8.1
MK297 F31 Woughton	6	Mid to late second	847	7.0	7.9	0	0.9	0	0.2	0.1	0	0.6	0	0.9	0.2	0.24	2.8	0	0.2 (R)	0.8 (R)
MK313 near Woughton	7	Late second	195	4.1	1.5	0	0	0	0	3.6	0	0	0	0	0.5	0	0	0	0	4.1 (R)
MK297 F24 Woughton	8	?V.late second	93	15.0	5.4	0	0	2.1 (C)	1.1	3.2	0	0	0	7.5	2.1	1.1	0	0	0	2.1 (R)
MK211/84 Wymbush	9	Late second to early third	126	0	0.8	0	0	0	1.6	0.8	0	0	0	0	0	0	0.8	0	0	0
MK269 Willen	10	Late second to mid third	120	2.5	4.2	0.8	0	1.7 (C)	2.5	0	0	0	0	0	0.8	0.8	1.7	0.8 (R)	0.8 (R)	6.7 (R)
MK211/44-52 Wymbush	11	?Mid to late third	194	11.3 *	0	0	0	0.5	0	0	0	0	0	0	1.5	0	3.1	0	0	0
MK211/66 Wymbush	12	Late third	175	0	0	0	0	4.0	0	0	0	0	0	0	0	0	0	0	0	0
MK211/57-58 Wymbush	13	Early to mid fourth	133	0	0.7 (R)	0.7 (R)?	0	13.5	3.0	3.8	1.5	0	0	0	0	0.7	4.5	0	0	0.7 (R)
MK211/42 Wymbush	14	Mid fourth	183	0	0	0	0	15.8	2.7	4.8	1.1	0	4.4	2.7	0	0	0	0	0	0
MK105G Bancroft	15	Mid to late fourth	46	0	0	0	0	19.6	0	8.7	0	0	0	4.3	0	0	0	0	0	2.8 (R)
MK354 Caldecotte	16	Mid to late fourth	69	0	1.4 (R)	0	0	14.5	2.9	0	1.4	0	0	1.4	0	0	0	0	0	1.4 (R)
MK105 E Bancroft	17	?late fourth to early fifth	147	0	0	0	0	10.2	2.0	5.4	0	0	2.7	7.5	0	0	0.7	1.7 (R)	0	2.7 (R)